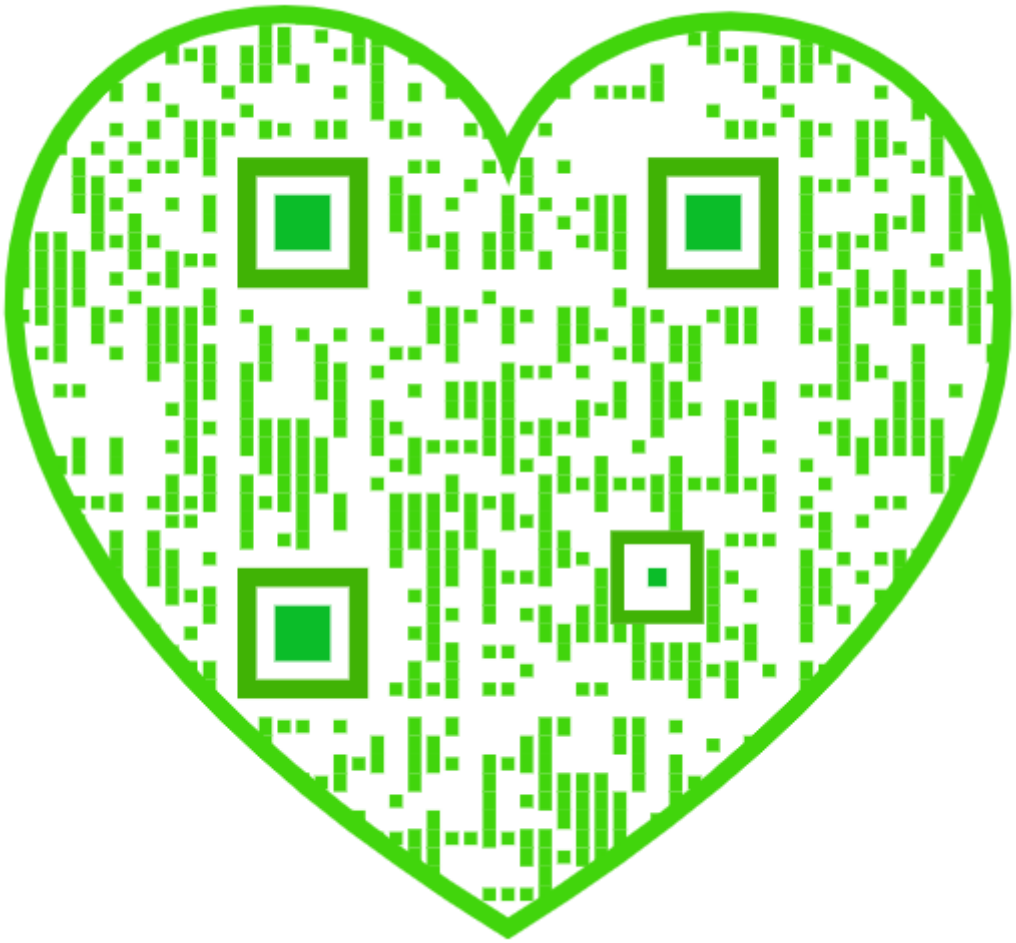

Revised and Enlarged, 3d Edition, 6th Thousand.

ELECTRICITY

AND ITS

RECENT APPLICATIONS.

297
494

A PRACTICAL TREATISE FOR STUDENTS AND AMATEURS WITH AN ILLUSTRATED DICTIONARY OF ELECTRICAL TERMS AND PHRASES.

BY

EDWARD TREVERT

AUTHOR OF: "EVERYBODY'S HAND-BOOK OF ELECTRICITY," "HOW TO MAKE ELECTRIC BATTERIES AT HOME," "EXPERIMENTAL ELECTRICITY," "DYNAMOS AND ELECTRIC MOTORS," ETC., ETC., ETC.

7
1446

ILLUSTRATED

LYNN, MASS.:

BUBIER PUBLISHING COMPANY.

1902

TK145
.B9

THE LIBRARY OF
CONGRESS,
ONE COPY RECEIVED
APR. 22 1902
COPYRIGHT ENTRY
Feb. 25-1902
CLASS a XXc. No.
27742
COPY B.

COPYRIGHTED BY
BUBIER PUBLISHING CO.
1891

COPYRIGHTED BY
BUBIER PUBLISHING CO.
1902

TK145
B92.

E. P. S. Dec. 11, 1902

PREFACE.

Although, at the present time, there are a large number of valuable treatises on the subject of electricity, still there seems to be a demand for more information, relating especially to the practical part of this science, and this demand is particularly among amateurs and students. For this reason I add this one to the list, trusting that it may be as favorably received as were my others. As in former books I have in this volume avoided technicality as far as possible, and confined myself to facts rather than theory.

I am indebted to The Electrical World, The Electrical Review, The Electrical Engineer, The Electrical Age and the Western Electrician for many articles and illustrations furnished by them for this book. I am also under obligations to the various electrical companies and to many individual electricians for information furnished on the subject for this work.

EDWARD TREVERT.

LYNN, Mass., June 1st, 1891.

PREFACE TO THIRD EDITION.

(SIXTH THOUSAND.)

By request of the publishers I have revised this book and brought it up to date. Quite a number of changes have been made, together with some additions, which I trust will add to the value of the book.

EDWARD TREVERT.

LYNN, MASS., 1902.

CONTENTS

CHAPTER		PAGE
I.	ELECTRICITY AND MAGNETISM	7
II.	VOLTAIC BATTERIES	25
III.	DYNAMOS AND HOW TO BUILD ONE	48
IV.	THE ELECTRIC ARC AND THE ARC LAMP . .	98
V.	ELECTRIC MOTORS AND HOW TO BUILD ONE,	117
VI.	FIELD MAGNETS	146
VII.	ARMATURES	154
VIII.	THE TELEGRAPH AND TELEPHONE	168
IX.	ELECTRIC BELLS: HOW MADE, HOW USED .	182
X.	HOW TO MAKE AN INDUCTION COIL	190
XI.	THE INCANDESCENT LAMP	199
XII.	ELECTRICAL MINING APPARATUS	209
XIII.	THE MODERN ELECTRIC RAILWAY	223
XIV.	WIRELESS TELEGRAPHY	240
XV.	X-RAYS	245
XVI.	THE ELECTRIC FOUNTAIN	253
XVII.	ELECTRO-MAGNETIC SURGERY	256
XVIII.	ELECTRIC WELDING	260
XIX.	SOME MISCELLANEOUS ELECTRICAL INVENTIONS OF THE PRESENT DAY	264
XX.	ELECTRO-PLATING	272
XXI.	ELECTRIC GAS-LIGHTING APPARATUS	275
XXII.	ELECTRICAL MEASUREMENT	294
XXIII.	RESISTANCE AND WEIGHT TABLE FOR COTTON AND SILK. COVERED AND BARE COPPER WIRE	328
XXIV.	ILLUSTRATED DICTIONARY OF ELECTRICAL TERMS AND PHRASES	333
	APPENDIX. AUTOMOBILES	347

ELECTRICITY
AND ITS
RECENT APPLICATIONS

CHAPTER I.

ELECTRICITY AND MAGNETISM.

ELECTRICITY and magnetism are very closely related.

What is magnetism? What is electricity? These are questions that none have yet been able to answer. When were they discovered? To answer that question: The Greeks discovered that there was a certain force in amber after it had been rubbed, and that it would attract small particles or light bodies. This substance they called *elektron*, from which came the word electricity.

The discovery of magnetism has never been decided. It is claimed to have been discovered by the Greeks, and it is also asserted that the Chinese knew of the compass at a much earlier date, yet to the Greeks we owe the name of this science. But let us pass over this early history as quickly as possible. About the year 1600, Dr. Gilbert, first

physician to Queen Elizabeth of England, published his work entitled "De Magnete" and showed among many other things that magnetic attraction was only peculiar to a few bodies, while electricity was universal.

Among others who made some remarkable discoveries at this early stage were Volta, Galvani, Franklin, Faraday, Ampere and Oersted. Modern discoveries in electricity may be said to date from

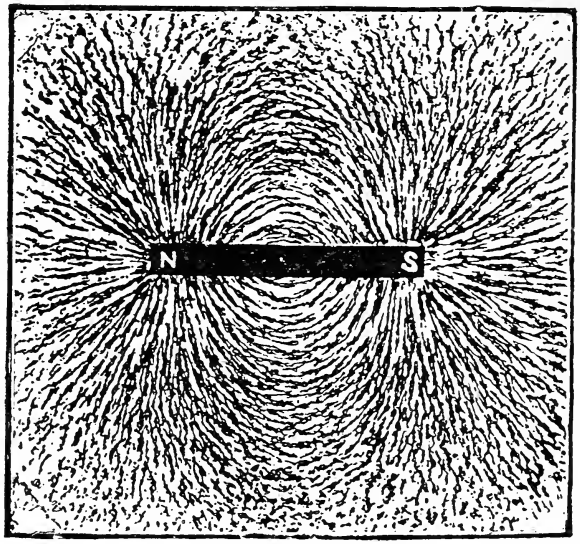

FIGURE 1.

the inventions of Barlow, Henry, Jacobi Pacinotti, Elias, Froment, Page, Cook, Gaston Plante, and Morse, down to the present time, and the inventions of Bell, Thomas Edison and Elihu

Thomson. Every magnet is supposed to have what are termed lines of force running around it and through it, or to possess what is termed a magnetic field. The same may be said of a helix carrying an electric current. A very simple experiment to illustrate this theory is to lay a piece of paper or glass over a bar magnet, and then to sprinkle iron filings over the paper or glass. The iron filings will be found to have arranged themselves into lines. See Fig. 1.

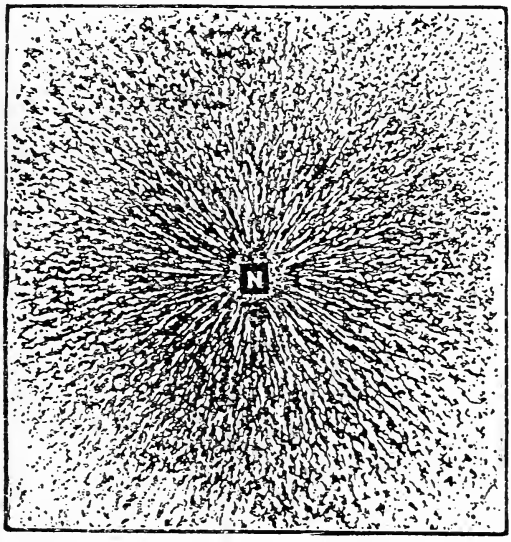

FIGURE 2.

These lines show the lines of force around the magnet. Each particle of the iron filings becomes

a separate magnet by induction so long as it remains in the magnetic field.

The filings should be very small and light, and should first be sifted through a very fine sieve. When paper is used you should tap it lightly when sprinkling the filings. Should one end or pole of the magnet be placed next to the paper or glass, the filings will arrange themselves as shown in figure 2.

We see by these experiments that the space around a magnet is pervaded with this unseen force, or lines of force as they are termed. An electro-magnet is a magnet which is only magnetic when a current of electricity is passing through its coils, and is generally made of a core of soft iron with a number of turns of insulated wire wound around it. This magnet has lines of force like the permanent magnet. Faraday showed that if the lines of force of a magnet were broken by plunging or revolving another magnet within its field, that a current of electricity was produced in the wire of the second magnet. See Fig. 3.

This is called induction, and it is the fundamental principle of the dynamo.

Should you take a common compass, hold above it and parallel to its needle, a wire carrying a current of electricity, the needle will instantly turn aside.

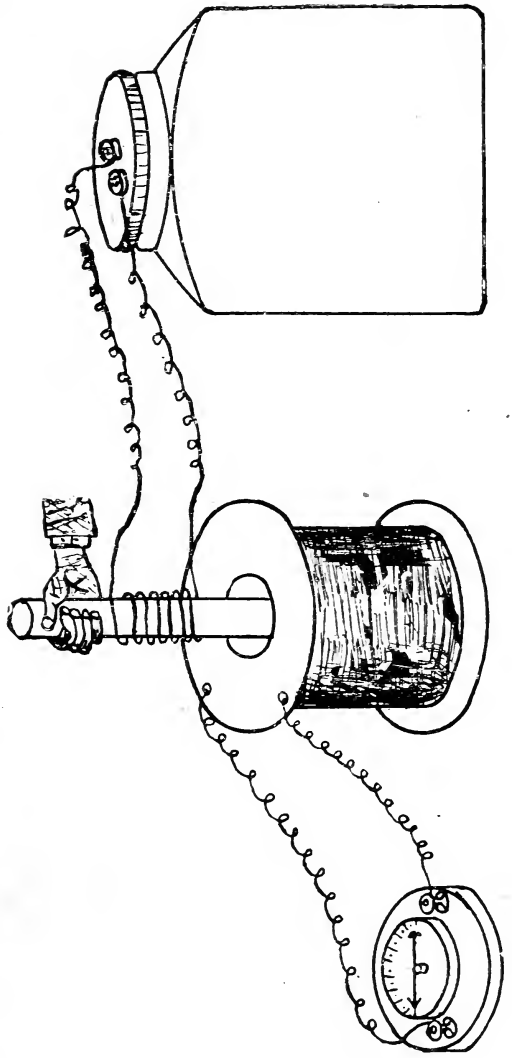

FIGURE 3.

When the current is flowing along the wire above the needle from North to South, the North pole of the needle will turn towards the East. If the current should be flowing from South to North, the needle will be deflected Westward. If you hold the wire below the needle the motions will be the reverse. Thus you see by this experiment the close relation of electricity to magnetism, and the first principle of the electric motor.

Magnetism like electricity may be communicated from one body to another, and as in the case of hardened steel, it will be found to remain in the article so magnetized, after the magnetic body has been removed. In other words the second body becomes a magnet like the first. This is also accomplished without any apparent decrease of strength in the first magnet. Steel and nickel seem to retain their magnetism, while iron more easily and strongly magnetized, loses its magnetism almost immediately after the magnetic influence has been removed.

Another strange thing about magnetism is that it can be communicated from one body to another through layers of glass, paper or wood, placed between the magnet and body to be magnetized, and that the intervening medium is directly concerned in this transmission of magnetic force, and that medium is the "ether," surrounding all molecules of matter.

Magnetism may be obtained from the earth, as the earth itself is a great magnet. A very simple experiment is to take a steel bar, place it in the magnetic meridian, with the north end dipping down, and while it is in this position strike it a number of hard blows with a wooden mallet, after which it will be found to have become magnetized.

Although Faraday showed by the aid of very powerful magnets that almost every substance was susceptible to magnetic influence, generally speaking, some bodies are not magnetic. Such is the case with copper, bismuth and antimony. These are called diamagnetic bodies; while such bodies as iron, steel and nickel are highly efficient in magnetic power. Every magnet has what is termed a North and South pole, which can be seen by observation of the compass. A very simple experiment to illustrate this principle, is to take a small common steel sewing needle, and after having magnetized it, by bringing it in contact with the poles of a permanent, or an electro-magnet, float it in a glass of water when it will be seen to take a north and south position. To float the needle it will only be necessary to lay it on a thin piece of tissue paper and carefully place both paper and needle on top of the water, the paper will soon absorb water enough to sink to the bottom of the tumbler, leaving the needle floating on the surface. It is supposed that should you divide a bar magnet into the smallest

molecules possible, each molecule would be a separate magnet, endowed with a North and a South pole. This may be illustrated by dividing a small bar magnet or by magnetizing a darning or knitting needle, and breaking it into small pieces, when each piece will be found to have become a separate magnet.

There are various ways of magnetizing bodies. Should you bring a bar of steel to a red heat and let it cool in the magnetic meridian (that is the bar should lie in a North and South position) it will become magnetized. The most powerful magnets are made by winding insulated copper wire around the steel to be magnetized, and then sending through the coils a strong current of electricity. You may partially or wholly destroy the magnetism in a steel magnet by rough usage, as hitting it, or knocking it about. It will also lose its magnetism on being heated to redness.

In the first part of this chapter the fact was mentioned that when amber is rubbed it will attract light bodies.

Dr. Gilbert discovered that not only amber but a large number of substances such as glass, sulphur, the diamond, etc., possess the same property. This is frictional or static electricity. Static electricity can be produced in larger quantities by influence or frictional machines. The first machine of this kind was invented by Otto Guericke and consisted

of a globe of sulphur being revolved on an axis by turning a crank, one hand being held against the globe as a rubber. He afterward improved this machine by substituting a glass globe in place of the sulphur. The two best frictional machines now in use are "The Holtz," and "The Topler machines." These machines were invented by two German

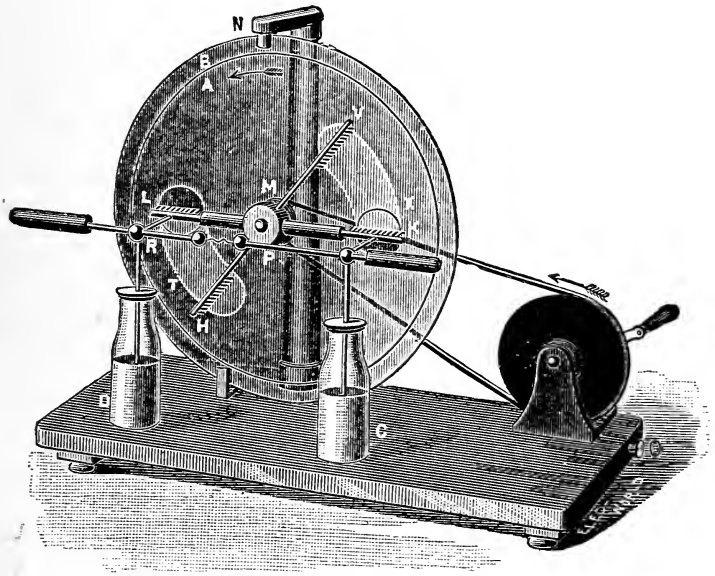

THE HOLTZ MACHINE.

electricians, Holtz and Töpler. The Holtz machine, of which there are a number of styles, is shown on this page. On a wooden base are mounted two glass plates; the rear plate *B* stationary, and supported by three ebonite insulators, two below and

one above; while the front plate *A* revolves in the direction of the arrow, on a steel shaft, which passes through an opening in the centre of the plate *B*, and is attached to the post at *M*. *A* is mounted on an ebonite hub, attached to a hollow shaft of brass, which revolves on the fixed shaft, and carries, at the end next the post, a small pulley, from which a belt extends to the driving wheel, which is revolved by a crank with an ebonite handle. The relative sizes of the wheel and pulley are such as to give the plate four to six revolutions for each revolution of the driving wheel, the plates of small machines requiring a more rapid revolution than those of larger ones. In front of the plate *A*, $\frac{1}{4}$ of an inch from the glass, are the combs *V* and *H*, attached to a brass core at the centre of the ebonite disc *M*; and the combs *K* and *L*, insulated by their attachment to ebonite rods projecting from the disc *M*, and connected by brass rods with the Leyden jars *C* and *D*, and with the sliding-rods *P* and *R*. These sliding-rods have ebonite handles, and terminate in brass balls at their inner extremities.

The plates are of sheet glass, about $\frac{1}{8}$ of an inch thick; of good insulating quality, and well coated with shellac. The stationary plate *B* has two circular openings called *windows*, directly opposite the combs *K* and *L*; and, on its rear surface, are cemented two paper inductors *T* and *X*; *T* extend-

ing from H to L, and X from V to K; and each armed with a row of points, projecting into each window.

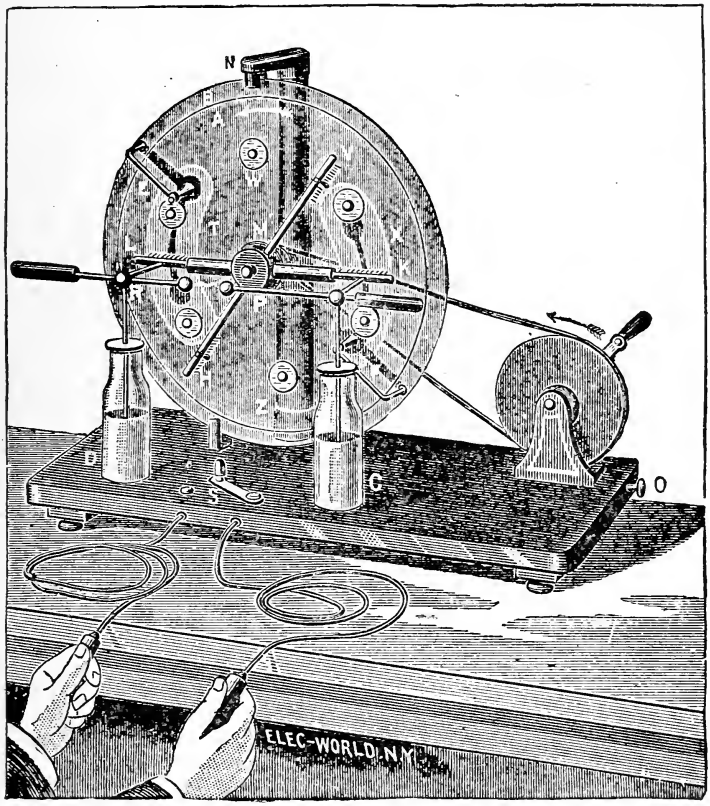

THE TÖPLER MACHINE.

The Töpler machine shown on this page has the same general construction as the Holtz; but, on the front surface of the revolving plate, are cemented a number of small metal discs, called

carriers; usually made of tin-foil with raised brass centres, which, as the plate revolves, are brought into contact with four wire brushes; two attached to the stationary plate, and two to the uninsulated combs. In this way the machine is made self inciting, as already mentioned.

The windows, and the rows of points projecting into them, used in the Holtz stationary plate, are omitted from the stationary plate of the Töpler: and the paper inductors are made longer, and have small tin-foil inductors under them, connected by tin-foil strips, with each other and also with the two brushes attached to this plate.

This machine was constructed by Philip Atkinson, and patented April 10, 1883, and December 8, 1885. The principal points covered by the patents are as follows:

1. The outside coatings of the Leyden jars *C* and *D* are of sheet brass, nickel plated; and are screwed firmly to the base; forming cups into which the jars fit closely, and are thus held in a fixed position; affording a firm support to the parts connected with them, and preventing liability to accident or injury to the jars or plates.

2. The induced current from these outside coatings is conveyed down by the brass screws which attach them, and along copper wires underneath, to the terminals of the switch *S*; through which, when closed, it passes from one jar to the

other; but when open, as in the cut, it passes by the brass sockets, seen on the edge, which are also connected with the terminals, out through the conducting cords, and a person, or other object, connected with their outer extremities. As this induced current flows simultaneously with the direct current from the inside coatings, the switch and sliding-rods place it completely under control of the operator.

3. The brush holders, *E* and *F*, are attached to the plate *B*, through holes near its edge; thus giving a direct passage to the electricity from the carriers on the plate *A*, where it is generated, through the glass, to the tin-foil inductors, represented by the dark shade, and the paper inductors *T* and *X*, represented by the light shade. By passing the electric charge *through the glass, inside its edge*, an insulating margin is interposed between the conductors and the edge, thus preventing loss from leakage, which is unavoidable when the brush holders are attached by clamps or ears *on* the edge.

4. The carriers on the plate *A* are of sheet brass, with raised centres, and are nickel plated, making them both durable and ornamental. The hard nickel surface is not affected by the action of the brushes, or the electricity, while tin-foil soon becomes defaced: and the carrier, being practically one piece, and its entire surface cemented to the glass, its raised centre cannot become detached, as

may happen when the centre is put on separately over a tin-foil base.

5. The combs *V* and *K*, also *H* and *L*, radiate at an angle of 45 degrees to each other, from the central disc *M*, to which they are attached; so that any possibility of error in regard to their position, or of displacement, is practically impossible.

The following improvements may also be noticed:

The base is made of two-inch strips, glued together lengthways, and heavy cleats screwed on underneath; giving all the advantages of iron as to freedom from warping, with the insulation and elegant finish of the wood. The driving wheel is of ebonite and the iron casting, on which it is mounted, slides in grooves on an iron plate, and is moved by the adjusting screw *O*, to regulate the tension of the belt.

The ebonite insulators, which support the plate *B*, have soft rubber packing, to ease the pressure on the glass.

The conducting rods of the Leyden jars pass through ebonite caps with cork attached underneath, which gives them a fixed vertical position, and affords firm support to the sliding-rods and the combs connected with them above.

These machines do not produce a very large amount of electricity, therefore are only adapted for experimental purposes.

Opposite conditions of electricity attract one another, and although electricity cannot flow through glass it can act across it by induction. For example : placing a plate of glass between two pith balls, one being electrified positively, the other negatively, will not interfere with their attracting or repelling one another, although the electric charges cannot pass through the glass. On this principle was invented the Leyden jar, and other condensers. The Leyden jar was accidentally discovered by Musschenbroek, and his pupil Cuneus, in the town of Leyden, from which it derives its name. It usually consists of a glass jar on which is pasted two coatings of tin-foil, one on the inside, and one on the outside, the coating covering the jar, three-fourths of its length. Electric connection is made by a chain, or a flexible wire hanging into the jar from a brass rod, which may be supported by a wooden cover to the jar, to which the rod is fixed. A brass nob is attached to the top of the rod. To charge the jar, it is necessary to hold or connect this nob to the prime conductor of an electrical machine ; the outer coating being either held in the hand, or connected to the earth by a wire. The jar can be easily charged in a few minutes in this way, and if made of good glass, kept dry and free from dirt will retain its charge for many hours. The jar may be discharged by holding it in one hand by the outer coating and

touching the brass nob by the other hand. The person so doing will see a bright spark pass between the nob and the hand, making a sharp report, and at the same time giving the person a convulsive shock.

A very simple Leyden jar can be made in the following manner, and was the original experiment of Musschenbroek and his pupil. Take a glass bottle, fill it about two-thirds full of water; make a hole through the cork and push through it a long nail, so that it hangs low into the water, when the cork is in the bottle. This jar can be charged like the modern Leyden jar, and in the same way, the water acting as the inner coating and the hand as the outer. When the jar is charged, it can be discharged by holding it in one hand and touching the top of the nail with the other. Thin glass has a greater capacity as an accumulator, than thick glass, but if the glass should be too thin, the jar will be liable to be destroyed by the spark of a powerful charge actually piercing it. A powerful battery may be made of Leyden jars by connecting a number of them together by their thin inner coatings: then also uniting their outer coatings. Care should however be taken in discharging this battery of Leyden jars, by using a pair of discharging tongs, as a shock from such a battery might prove fatal. The discharging tongs is an arrangement consisting of a brass rod with two brass nobs, and

insulated from the hand by a glass handle. The electric discharge we see during a thunder shower is this same kind of so called static electricity.

Electricity is often found in belts, running pulleys and shafting in factories. Placing your finger, or hand, or what is better, holding a piece of copper near a large belt which is running shafting, you will hear a cracking sound and sometimes receive a perceptible shock. The writer has seen enough electricity collected on wires from large belts to light coal gas. This experiment is more successful in cold weather. Quite a quantity of frictional electricity is developed in cylinder printing presses when moving at full speed, which electrifies the paper so that the sheets will stick together quite firmly, and should you pull them apart the same crackling sound spoken of in regard to the belt is heard, and the person separating them will sometimes receive quite a shock.

Electricity can also be obtained by joining two dissimilar metals by soldering, and then heating their points of contact. Such currents are called Thermo-Electric currents. The same result may be obtained by lowering the temperature at the point of contact. For example, the metals joined, may be copper and iron or Bismuth and Antimony. There are a number of other metals which if joined

together in the way here described will produce Thermo-Electricity.

Now let us take up the subject of the production of electricity by chemical action, or by voltaic batteries as they are termed.

CHAPTER II.

VOLTAIC BATTERIES.

Voltaic Batteries derive their name from Volta, who made the discovery that when a number of contacts of two dissimilar metals are placed together with some moistened flannel or paper placed between each pair, a small amount of electricity can be obtained by touching simultaneously the top and bottom of the pile of discs, or the wires connected to them. This was called the Voltaic pile, and was made by placing a pair of discs of copper and zinc in contact with one another, then laying on the zinc disc a piece of flannel or paper, moistened in some salt and water, or very dilute sulphuric acid, then another pair of discs of copper and zinc and so on, being sure to separate each pair of discs by a moist conductor.

Volta soon improved this by placing in a glass jar, partly filled with a very weak solution of sulphuric acid, a strip of copper and a strip of zinc ; a wire was soldered to each strip, and by connecting a number of these cells, the zinc of one cell to the copper of the next and completing the circuit by

bringing the terminals together, a much larger quantity of electricity is obtained than from the Voltaic pile. But such a battery as this is found to be wholly impracticable, polarization taking place almost immediately. By polarization, we mean that bubbles of hydrogen liberated at the surface of the copper plate stick in large numbers on its surface. This weakens the current by causing a resistance to the flow of the current, for these bubbles of gas are bad conductors. It also weakens the current by setting up an opposing electromotive force, hydrogen being almost as oxidizable a substance as zinc. Thus you see the hydrogen produces a difference of potential which tends to start an opposing current in the opposite direction from the zinc to the copper element. In order to overcome this polarization various means have been devised, viz :

1st.—Mechanical means can be used by simply brushing off the bubbles of hydrogen from the surface of the positive pole ; thus reducing the resistance. Another remedy which is employed in Snee's Cell, which consists of a zinc and a platinized silver plate dipping into dilute sulphuric acid. The silver plate having its surface thus covered with a rough coating of finely divided platinum gives up the hydrogen bubbles freely.

2d.—Chemical means may be used by adding a highly-oxidizing substance, such as bichromate of

potash, chloride of lime, bichromate of soda, etc., which, if added to the acid, destroy the hydrogen bubbles, whilst they are in the nascent state.

3d.—Electro-chemical means may be used, which is done by employing double cells. This means is used in the Daniels and Gravity cells. In this case, solid metal, such as copper, is liberated instead of hydrogen bubbles which entirely prevents polarization.

All zinc used in batteries should be amalgamated, as the impure zinc that is for commercial use will continuously dissolve in acid and give off hydrogen bubbles, even when the circuit is not closed. This is called local action. It is caused by impurities in the zinc, such as particles of iron or other metals. These particles set up an opposing current, and each particle acts as a separate miniature voltaic cell. Amalgamation does away with this. The particles of impure metal do not dissolve in the mercury, but are carried off from the surface of the zinc plate by the hydrogen bubbles. As the zinc dissolves, a part of the film of mercury unites with fresh portions of the zinc, consequently always keeping a clean bright surface presented to the acid.

Zincs may be amalgamated in the following manner: First, immerse the zincs in a solution of dilute sulphuric acid, then into a bath of mercury.

A brush or cloth should be used to rub the mercury well into the zinc so as to reach all points of the surface.

Electric Batteries may be classified according to their use into open circuit and closed circuit batteries. An open circuit battery is a battery which is used when a current is needed for a few seconds at a time. If the circuit is kept closed too long the battery will become polarized, that is, hydrogen will collect on the carbon and prevent the current passing through the circuit. If, however, the circuit is opened the battery will recover itself in time. These batteries are designed for bells, telephones, gas-lighting work, etc. To this class belong the Leclanche, Samson and Champion.

Closed circuit batteries are used for continuous work as for electric lighting, electro-plating, fire alarms, etc. To this class belong the Grenet, Gravity, Grove, Bunsen, and Fuller Batteries.

OPEN CIRCUIT BATTERIES.

The Samson Battery.—This battery is not only presented for its great efficiency in call bell, annunciator, burglar alarm and gas-lighting work, but it is also especially adapted to telephone service on account of its remarkable endurance and long life.

The essential characteristics of the Samson Battery are its fluted carbon porous cup and cylindrical zinc.

The carbon cup is corrugated, to present a much larger surface to the action of the solution; is porous to render the flow of the solution into the cup unresisted; is filled with a depolarizing material, to add to the battery durability and recuperative power. The zinc is of the best quality,

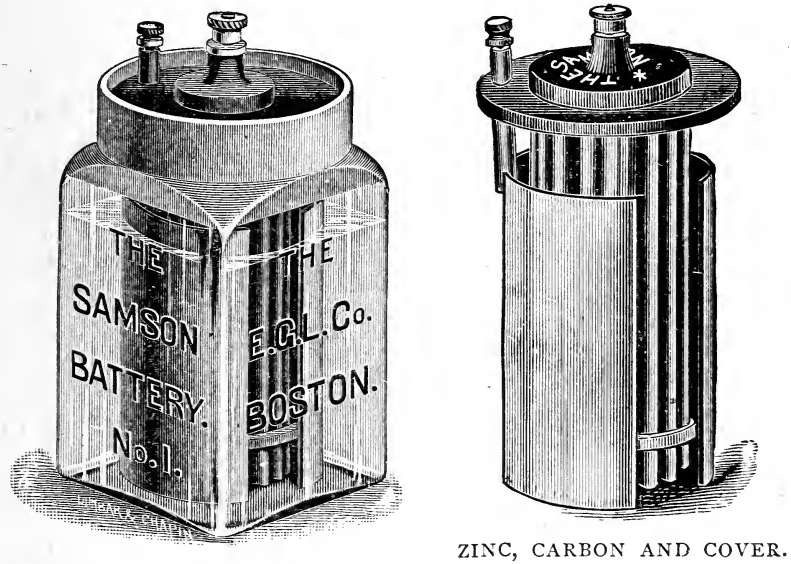

ZINC, CARBON AND COVER.

well amalgamated, presents to the solution an unusually large surface, and nearly surrounds the carbon cup, thus reducing the internal resistance of the battery to almost nothing.

The neck of the jar has a choke which supports a rubber cover, to prevent evaporation, closely fitting the corrugated carbon, which it holds safely apart from the zinc. In this cell the exciting liquid is a solution of sal ammoniac.

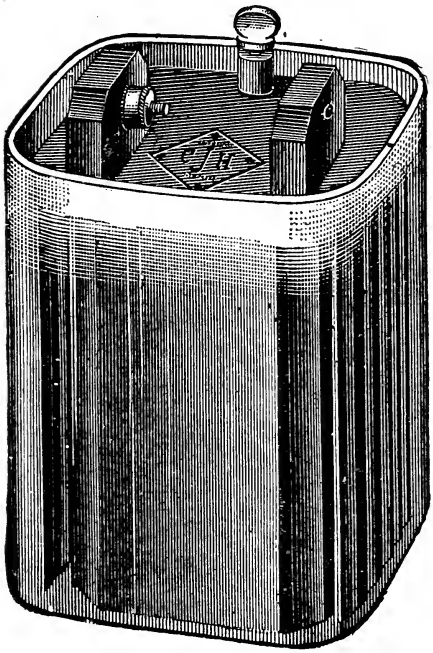

COMPLETE CELL OF CHAMPION BATTERY.

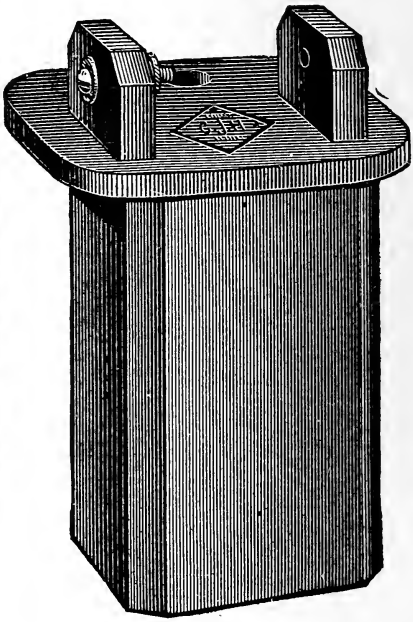

CARBON RESERVOIR OF CHAMPION BATTERY.

Champion Battery.—The accompanying four cuts illustrate a new primary, put upon the market by Mr. C. J. Hirlimann.

The battery is made up in two distinct patterns, the difference, however, lying only in the form of

the zinc, and it will be seen by referring to the illustrations that one of the zincs consists of the ordinary rod Leclanche zinc, while the other is a large surface corrugated sheet zinc.

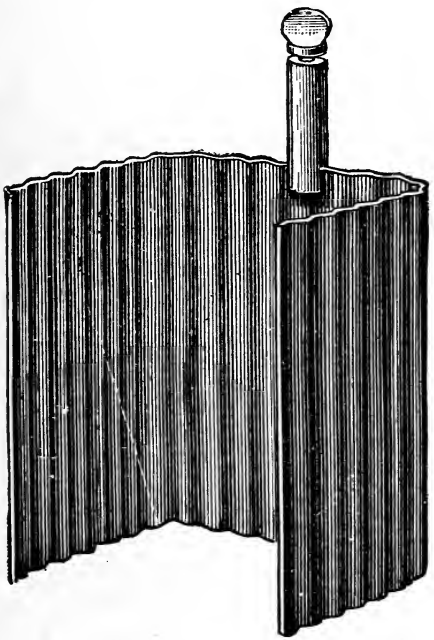

CORRUGATED ZINC OF CHAMPION BATTERY.

ROD ZINC OF CHAMPION BATTERY.

When the rod zinc is employed the battery is most suitable for telephone work and where a constant output of energy is required, while the corrugated zinc is used where large quantities of current for a short time is the desideratum, as in gas-

lighting work, electric bell ringing, etc. In further support of the merits of the battery an official measurement of the cell by the distinguished electrician, George d'Infreville, of New York city, is submitted, in which the following figures are set forth: Electro-motive force, 1.4 volts; internal resistance, .17 ohms; current, 8.3 amperes.

The carbon reservoir is quadrangular in shape, and charged with ingredients under a secret formula, and is provided with a neat top, fitting closely into a glass jar, to prevent evaporation and facilitate sealing.

The exciting liquid is a solution of sal ammoniac.

The Leclanche Battery.—In this cell the exciting liquid is a solution of sal ammoniac. In this the zinc dissolves, while ammonia, gas and hydrogen are liberated at the carbon pole.

To prevent polarization in the disque form, the carbon plate is packed inside a porous cell with fragments of carbon and powdered binoxide of manganese, which slowly yields oxygen, and destroys the hydrogen bubbles.

The Leclanche cell will give a continuous current only for a short time, the power falling off, owing to the accumulation of hydrogen bubbles; if the circuit is left open for a time the cell recovers itself, the binoxide gradually destroying the polarization.

The cell is in other respects perfectly constant, very clean, and as it does not require renewing for months or years, when closed only for a few seconds at a time, it is well adapted for working electric bells, annunciators, burglar alarms, and for other domestic purposes. This battery is set up in the following manner:

DISQUE FORM.

Put six ounces of sal-ammoniac into the glass jar, fill one-third full of water, and stir. Put in the porous cell and fill with water to the neck of the jar, pouring a little water into the hole in the porous cup. Put in the zinc and connect the battery.

The inside of the rim of the jar is paraffined, and should be kept greased to keep the salts from creeping.

The battery should be kept in a dry place of medium temperature. It requires very little attention; water should be poured in occasionally to supply the loss by evaporation. In case the solution becomes milky, and the battery fails to work, the solution should be thrown out and fresh sal-ammoniac and water put in. If this does not restore the battery, soak the porous cell in warm water. If it still fails, new porous cells must be used.

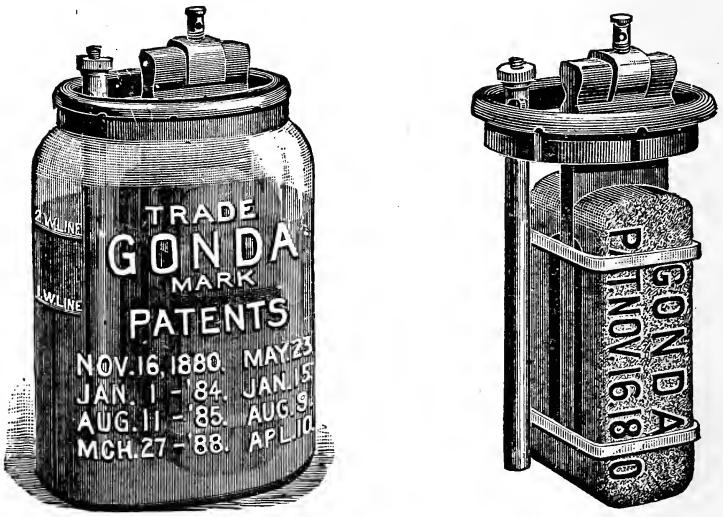

PRISM FORM.

The Prism Form.—In this cell the porous cup is dispensed with, and in its place is substituted a pair of compressed prisms or plaques, which are simply attached to the carbons by means of two rubber bands. The prisms are formed of a paste

consisting of 40 parts binoxide of manganese, 52 parts carbon, 5 parts gum and 3 parts bisulphate of potassium. This paste is formed into prisms under a pressure of about 4,000 pounds to the square inch at the temperature of boiling water. In the latest prisms the bisulphate of potassium is omitted.

When the elements have become exhausted from long service the prisms should be taken off, new prisms should be attached, and the battery set up as before, with new zinc and fresh sal-ammoniac.

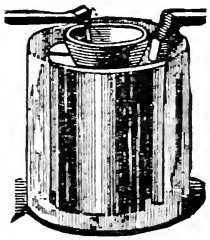

GROVE CELL.

Close Circuit Batteries.—The Grove cell consists of a glass jar containing the amalgamated zinc cylinder and dilute sulphuric acid. In the inner porous cup a piece of platinum foil dips into concentrated nitric acid. There is no polarization, for the hydrogen liberated at the zinc plate, in passing through the nitric acid on its way to the platinum pole, decomposes the nitric acid, and is itself oxidized, producing water and the red fumes of nitric peroxide gas. This gas does not produce

polarization, as it is readily soluble in nitric acid. The battery has both a large amount of electromotive force and a low internal resistance. It will furnish continuously for three or four hours a strong current. This battery is shown on page 35.

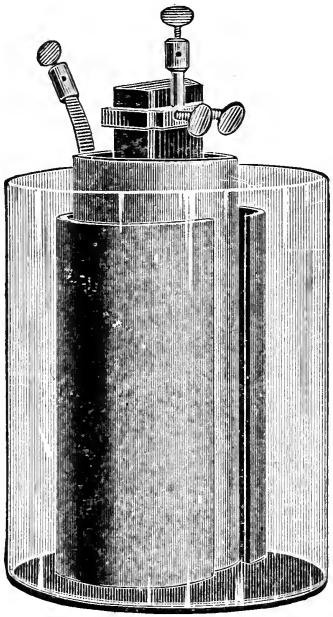

BUNSEN CELL.

The Bunsen cell is a modification of the Grove, the difference being in this cell that the platinum foil is replaced by a plate of hard carbon.

Gravity Batteries are two fluid cells.

Instead of employing a porous cell to keep the

two liquids separate, it is possible, where one of the liquids is heavier than the other, to keep the latter on the bottom, and have the lighter floating upon it; this separation, however, is never perfect, the heavy liquid slowly diffusing upward.

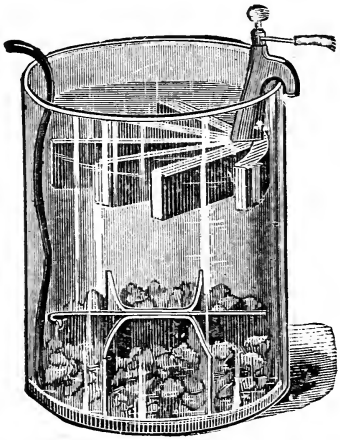

GRAVITY BATTERY.

To set up this battery proceed as follows:

Open out the copper, so as to present all of its surface to the action of the solution, place it in the bottom of the jar, run the insulated wire out of the top of the jar for connecting up.

Suspend the zinc above the copper by hanging the hooked neck on the rim of the glass.

Pour clean soft water into the jar until it covers the zinc, then drop in six or eight ounces of copper sulphate (blue vitrol) in small crystals.

The Edison Lalande Cell. — The elements employed in this battery are zinc, and black oxide of copper, in a solution of high grade caustic soda. When the circuit is closed, the water of the solution is decomposed into nascent oxygen and hydrogen. The oxygen goes to the zinc plate (the negative pole), and unites with it, forming oxide of zinc. This, in its turn, is dissolved by the caustic soda solution, forming zincate of soda. The hydrogen goes to the oxide of copper plate (the positive pole), and unites with the oxygen contained in the oxide of copper, forming water (H_2O), and leaving behind metallic copper. As the oxide plate is porous, this action goes on, when the battery is in service, until the oxide plate is reduced throughout its entire mass to metallic copper in a finely divided state.

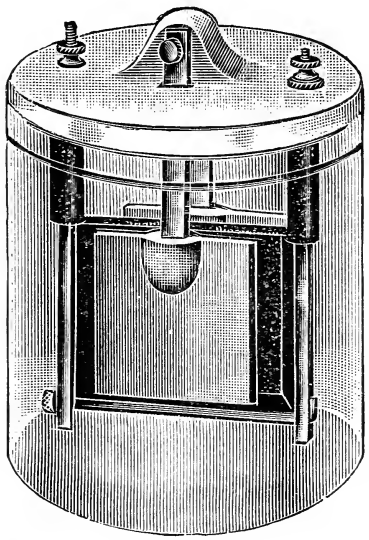

THE EDISON LALANDE CELL.

The positive pole is a compressed plate of oxide of copper, having the surfaces reduced to metallic

copper so as to give good conductivity to the battery.

The negative pole of the battery is made of purest zinc, to which mercury is added at the time of casting the plates, so that the mercury will amalgamate the zinc throughout its entire mass, and prevent any local action occurring. Each battery contains two zinc plates, the stems of which have a small hole punched in the top of same.

The containing vessel is a porcelain jar with a porcelain cover fitting on same, both of which are made of vitreous porcelain so that they will be strong and durable. In charging the battery, it is only necessary to fill the jar to the brown line on the inside, and then to add the charge of caustic soda, which will dissolve almost immediately.

A layer of oil is used on top of the cells to prevent creeping and evaporation.

All Edison-Lalande batteries have an initial E.M.F. of .95 volt, which drops to .7 volt on closed circuit. They are made in a variety of sizes, each adapted to a particular class of work.

Mesco Dry Battery. — The battery shown in the cut is made by filling in the space between a hollow carbon cylinder and a metal plate, which faces both external and internal surfaces of the cylinder, with the chemicals in a dry or rather a

pasty form. The whole is then sealed tight into the covering and is ready for use. Neither of the elements is consumed during action, but the chemicals are decomposed. Its E. M. F. is about two volts, and it will give a current of from 6 to 10 amperes, as its internal resistance is very low.

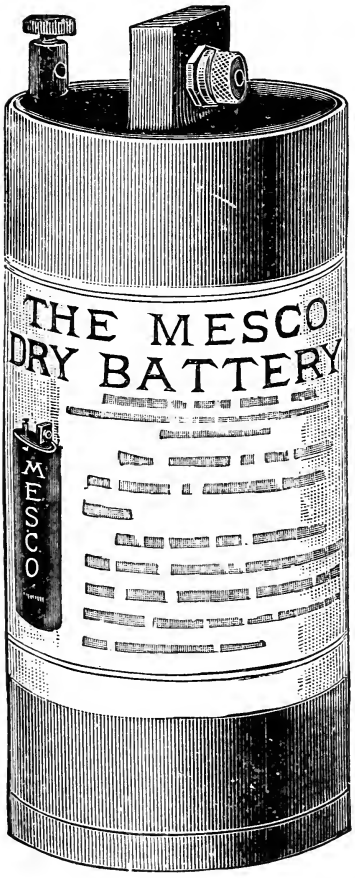

The Grenet Battery, shown in the engraving, consists of a glass jar or bottle. A well amalgamated zinc plate forms one pole, and a pair of carbon plates, one on each side of the zinc, joined at the hard rubber top, forms the other pole. The zinc plate is fized to a brass rod, by which it can be drawn up out of the solution when not in use. To charge this battery, proceed as follows :

To three pints of cold water add five fluid ounces of sulphuric acid. When this becomes cold

add six ounces (or as much as the solution will dissolve) of finely pulverized bichromate of potash. Mix well.

Pour the above solution into the glass cell until it nearly reaches the top of the spherical part; then draw up the zinc and place the element in the cell. The fluid should not quite reach the zinc when it is drawn up.

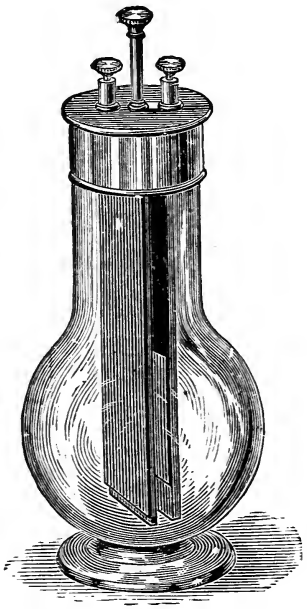

GRENET BATTERY.

Storage Batteries or Accumulators.—The possibility of storing electricity was first suggested in 1801, by Gautherot's discovery that two plates of the same metal immersed in acid, after having

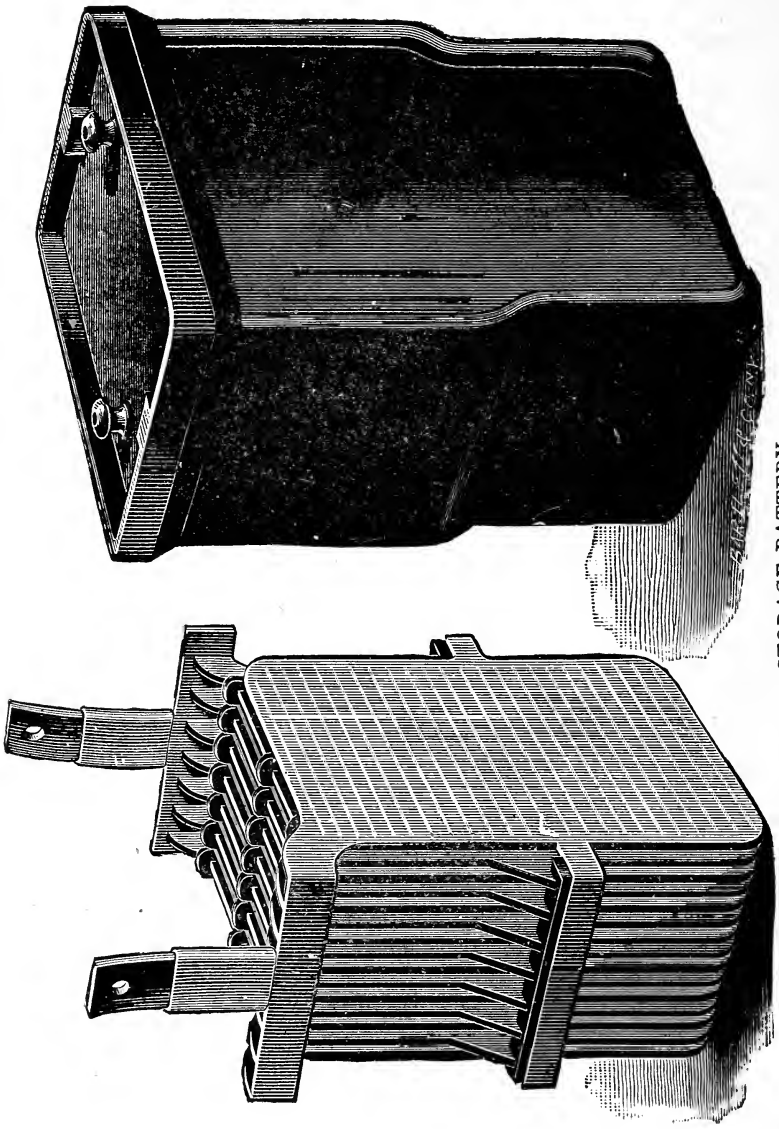

STORAGE BATTERY.

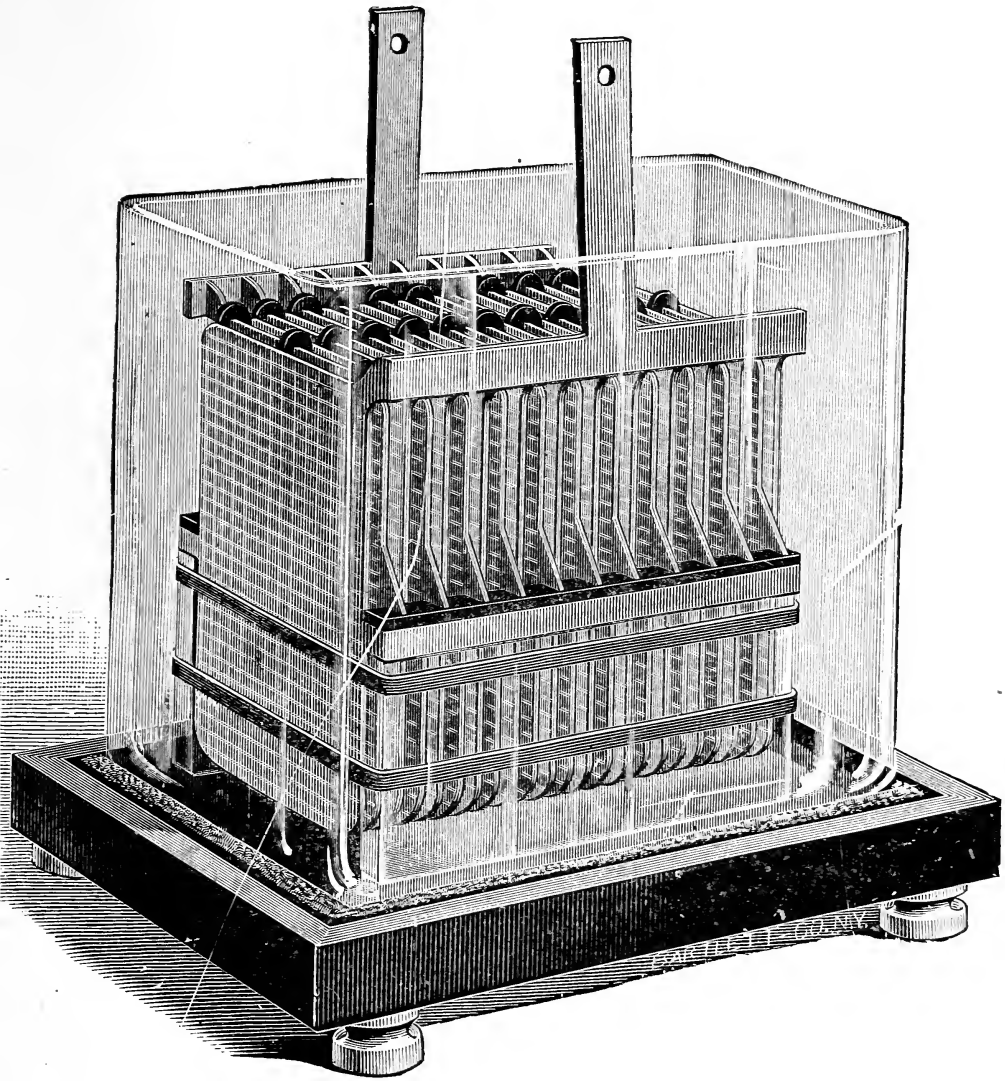

STORAGE CELL.

been subjected to the action of an electric current in one direction, would produce a secondary current in the opposite direction.

In 1859 Gaston Planté, while engaged in a series of experiments upon this phenomenon, devised a storage battery consisting of plates of lead immersed in dilute sulphuric acid.

Camille A. Faure, after many experiments in this field, made the remarkable discovery that a paste of oxide of lead mechanically applied to the plates, brought them instantly into the condition to receive a charge, which was only accomplished by Planté after months of electrical treatment.

Should the reader wish to make an experimental storage cell he will find complete directions for so doing in the author's book of "How to Make Electric Batteries at Home." The storage battery requires recharging, either by having a current sent through it from a direct current dynamo, or a number of primary batteries, the current from a dynamo being preferable and the least expensive. The current is sent from the negative to the positive electrodes. The strength of this current should be about four volts to a cell, the average capacity of the storage cell being two volts.

The storage cells shown in the illustrations are made by The Accumulator Company of New York, and combine the invention of Faure with many improvements.

This cell is made up of fifteen plates, eight negatives and seven positives, and is especially adapted to isolated and central station lighting. These plates are separated by what is called a hair pin separator, which prevents them from short circuiting or buckling.

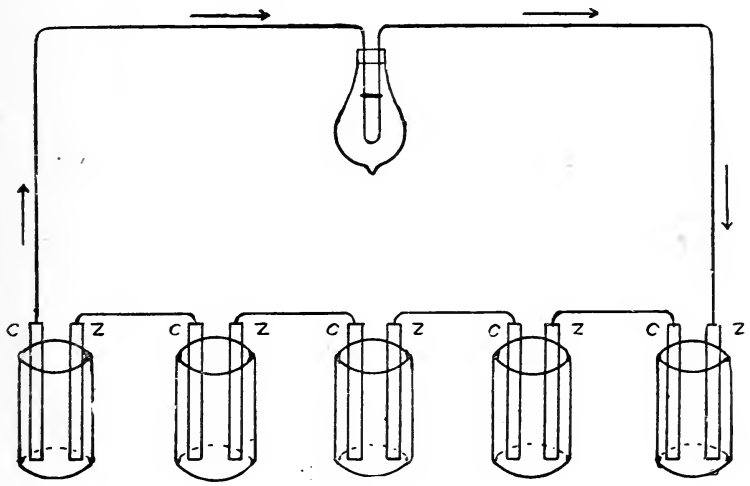

FIG. 1.

The electro-motive force of the cell is about 2 volts.

The internal resistance is extremely low, say from .001 to .005 ohm, and the range of the current large.

The capacity of the cell in perfect condition is somewhat underestimated at 300 ampere-hours; 30 amperes, a safe working current, will last for over ten hours, with not exceeding ten per cent. drop in

electro-motive force, or a less current will be supplied by the cell for a proportionately greater number of hours. A greater rate — up to 300 amperes — could also be obtained, but so great a strain upon this size of cell would injure the plates.

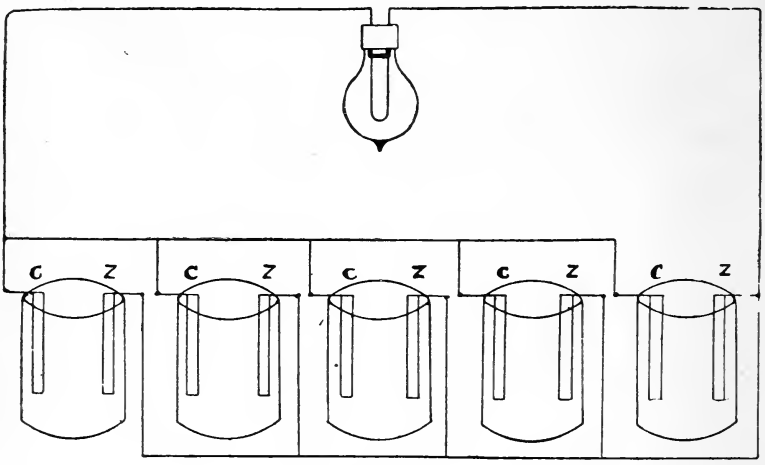

FIG. 2.

The illustration on page 42 represents the "15 m" accumulator elements and hard rubber box; and the illustration on page 43 represents the "23 m" accumulator elements in glass.

Before closing this chapter perhaps it would be well to say something in regard to connecting voltaic cells, in order to obtain different results. For example, supposing we have a battery of five cells, and each cell has a voltage of two volts, and gives a current of one ampere, and wish to run an

incandescent lamp that requires ten volts and a current of one ampere, we would connect the positive pole of the first cell to the negative pole of the second, then the positive pole of the second to the negative pole of the third, and so on until all the cells are connected, then connect the negative pole of the first cell and the positive pole of the last cell to the two wires of the lamp and we will have the required ten volts and one ampere of current. This is called connecting in series. See Fig. 1.

Suppose our lamp only required two volts and five amperes to run it, and one cell only gave one ampere and two volts. We will then have to connect our batteries in multiple, or, in other words, for quantity; that is, we will connect all the positive poles of each battery together, and all the negative poles together, then we will take one wire from our positive poles and one wire from our negative poles and connect them with our lamp. See Fig. 2.

CHAPTER III.

DYNAMOS AND HOW TO BUILD ONE.

Dynamos, or generators, as they are termed, are machines for generating electricity by mechanical force. Practically any machine that generates electricity by mechanical means, from the large generators of to-day, back to the copper disc which was rotated between the poles of a magnet by Faraday, may be called a dynamo. We may say that a dynamo consists of three parts, namely: The field magnets, the armature and the commutator.

The field magnets are usually the stationary part, and consist of iron cores, solidly connected together with an iron frame, and have a number of layers of insulated copper wire wound around them. These magnets are called electro-magnets, because they are practically only magnetic when a current of electricity is passing through their coils.

There, however, remains a feeble residual magnetism in the pole pieces, which, when excited

by rotating the armature at a high rate of speed, within the magnetic field, will induce a small current in the coils, that rapidly increases, and on being transmitted through the coils of the electro-magnets, augments their magnetism and produces in them still stronger currents.

The armature, usually the rotating part, is an iron core, made up of soft iron discs. These discs are mounted on a shaft, and are insulated from one another by placing between them thin sheets of paper. Upon this core is wound a number of layers of insulated copper wire, and their free ends connected to the segments of the commutator.

The commutator consists of a number of copper bars or segments, usually affixed radially around the shaft of the machine, each segment being thoroughly insulated by thin sheets of mica, each segment receiving the electricity that is generated from the coil or coils attached to it. The commutator is employed to change the direction of the current.

The current is collected from the commutator by brushes. These are either made of copper wires bundled together, copper plates, or carbon plates, which are in contact against the commutator.

There are two types of dynamos—the continuous current and the alternating current.

In the continuous current dynamo the current generated always flows in the same direction, there being a commutator from which the current is collected by the brushes.

In the alternating current machine the current generated flows at rapid intervals, first in one and

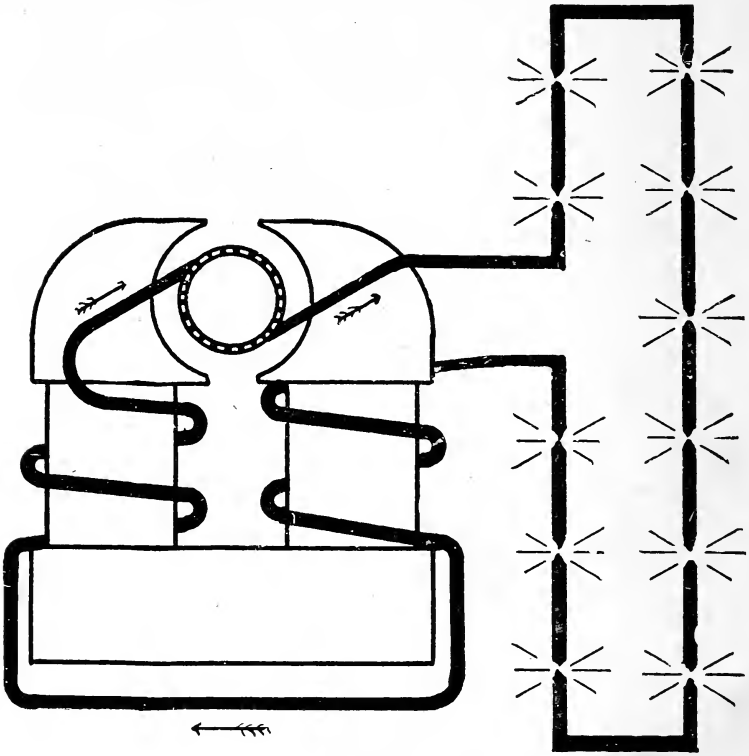

FIGURE 1.

then in the opposite direction. This dynamo having no commutator, a collector of two metal rings is necessary, on which the brushes rest. The magnets of this machine must have a con-

tinuous current to excite them, and this current is generated by another small, continuous current machine, which is called the exciter.

There are three ways of winding dynamos: the series, the shunt, and the compound. In the series wound dynamo, the generated current is passed through the field magnet coils, which are connected in series with the armature and external circuit. See Fig. 1.

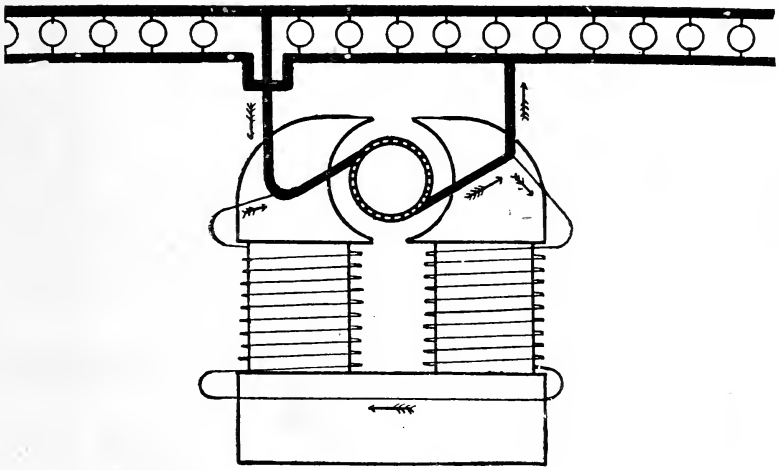

FIGURE 2.

In the shunt wound dynamo the field magnets are wound with fine wire to receive only a small portion of the whole current generated in the armature. These coils are connected to the brushes of the machine and constitute a by-pass circuit, or what is called a shunt. See Fig. 2.

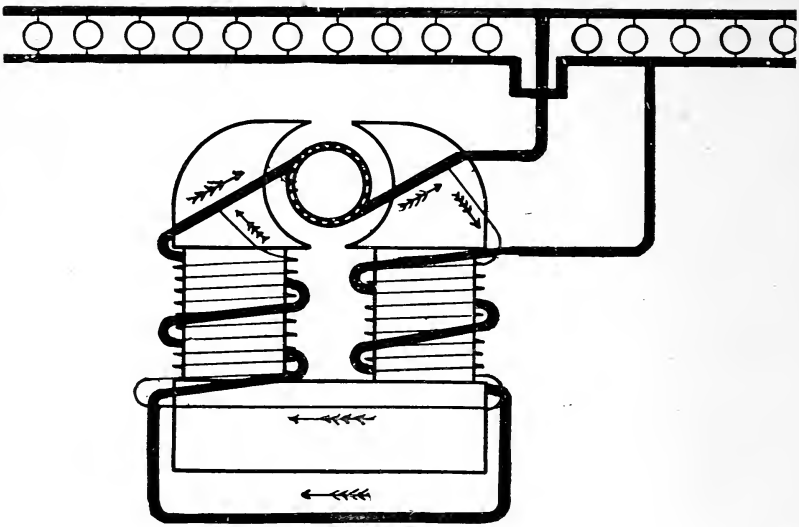

FIGURE 3.

The compound wound dynamo is a combination of the series and shunt. The field magnets are wound with two sizes of wire: Coarse wire, which is in series with the armature and the external circuit, and a finer wire, which is in shunt with the brushes. See Fig. 3. This dynamo is adapted more especially for incandescent lighting.

To produce a current from a dynamo a certain speed of the armature must be obtained, for the machine will refuse to magnetize its own magnets when there is too much resistance or little speed.

Thus far we have only looked into the principles of the dynamo. Let us now look into some of the different systems of the present day. We will take first "The Edison."

The Edison Direct Current Dynamo.—The field magnets consist of vertical cylinders with large wrought-iron cores, which rest upon cast-iron pole pieces, and nearly enclose the armature. The armature is drum shaped. The core consists of a number of sheet-iron discs, insulated from each other by sheets of thin paper. The core is mounted on an iron shaft, but insulated from it by an interior cylinder of lignum vitæ, while an external covering of paper insulates it from the coils. The coils consist of cotton covered copper wire, stretched longitudinally and grouped together in parallel, a number of wires in a group, all of the group being so connected as to form a continuous closed circuit. The groups are arranged in concentric layers, and are of the same number as the segments of the commutator, the ends of the wires in each group being attached to arms connecting with the commutator segments, a spiral arrangement being adopted in making the connections between the straight portions of the wire and the arms. The object of grouping is to secure flexibility for winding by the use of small wire and low electrical resistance, by having several wires in parallel, the effect as to the resistance being practically the same as if the several wires were combined in one. At the ends the wires are insulated from the core by discs of vulcanized fibre with projecting teeth. The discs of the core are bolted

together by insulated rods, and the coils are confined by brass bands surrounding the armature. The brushes are composed of several layers of copper wires, combined with flat copper strips, two

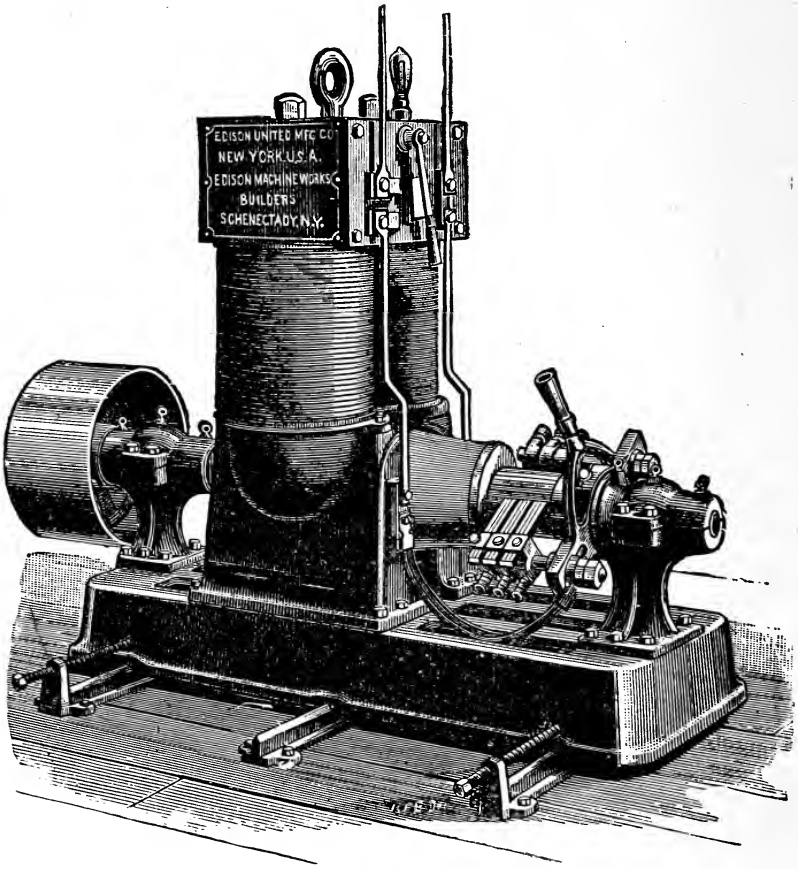

EDISON DIRECT CURRENT DYNAMO.

layers of wire being placed between each two strips. This arrangement is to give a more perfect connection, and to prevent sparking by furnishing

numerous points of contact, the copper strips confining the wire and making the brush more compact. On page 54 will be found an engraving of the machine.

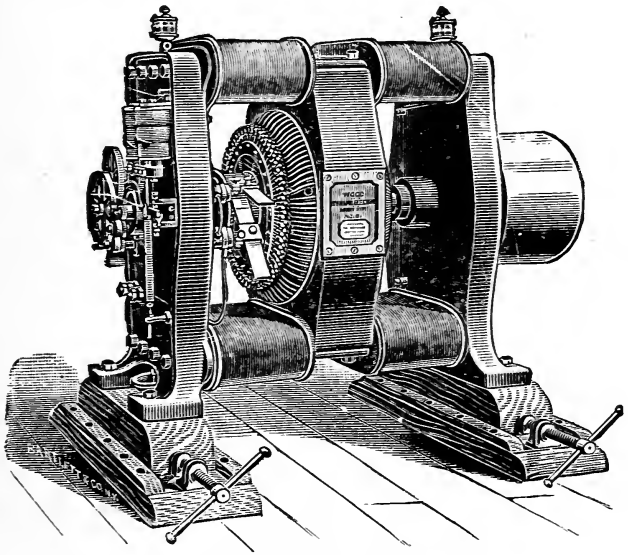

THE WOOD ARC DYNAMO.

The Wood Arc Dynamo.—The engraving on this page gives a very good idea of the size and general appearance of the new improved Wood Arc Dynamo.

The armature is of the Gramme type, and is made in the form of a ring of soft iron wire. It is then closely covered with coils of carefully insulated copper wire. These coils are so insulated and placed in the armature as to prevent the possibility of a short circuit between them.

The commutator plays an important part in the protection of the armature. The narrow copper plates of which it is made are thoroughly insulated from each other with fire-proof material. It is so constructed that one or more of its sections may be readily removed, without interfering with the remaining ones. Where the ends of the armature coils are connected to the commutator clamps, they are enlarged so as to increase their strength and lessen their tendency to vibrate or break, and these enlarged ends are connected with the radial arms of the commutator by a screw clamp. This enables any section or coil in either the commutator or the armature to be easily removed or replaced without seriously interfering with any other part of the dynamo.

The centre is composed of a gun-metal spider, so constructed as to give perfect ventilation, and the greatest strength with the least weight. The spider also absorbs any undue heat that may be electrically developed in the ring, and this heat is so quickly dispersed by the current of air produced that the tendency to overheating is entirely removed.

The dynamo is placed on a sliding base, which renders it possible to tighten or loosen the belt while the machine is in operation.

The Thomson-Houston Arc Dynamo is of unique construction. It was designed by Professor Elihu Thomson and Edwin J. Houston, of Philadelphia. Its armature is nearly spherical, and is wound with only three coils. The three coils are wound over the shell of the armature in three windings, each layer being insulated from the shell and its neighbors. When the winding is completed, the three ends of the coils are carried through an opening in the shaft and attached to three segments of the commutator. The field magnets are cup shaped; and consist of two cast-iron tubes, furnished at their inner ends, with hollow cups cast in one with the tubes, and accurately turned to receive the armature.

Upon these tubes are wound the coils; afterwards the two magnets are united by means of a number of wrought-iron bars, which constitute the yoke of the magnet and at the same time protect the coils. The magnets are carried on a framework which also supports the bearings for the armature shaft.

The commutator has only three segments, in contact with which are four brushes. Regulation is obtained by an electro-magnet regulator, which controls the amount of current by automatic shifting of the brushes in such a way that they short circuit one of the armature coils for a greater or less period of time, as the occasion may require.

When from a reduction of resistance in the lamp

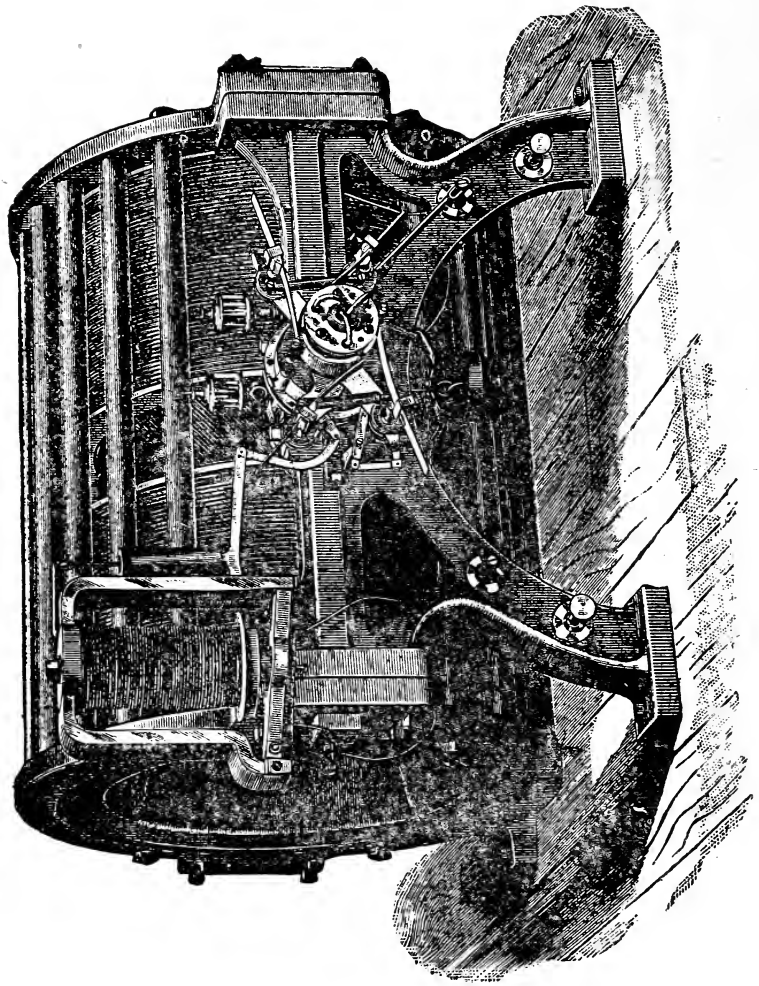

THOMSON-HOUSTON ARC DYNAMO.

circuit by the extinguishing of a lamp, or otherwise, the current feeding the other lamps becomes liable to abnormal increase. This increase of current is made to flow through the coils of wire surrounding the iron core of the regulator; the core then becomes magnetized, causing the yoke to which the brushes are attached to be drawn up towards the regulator magnet. This results in shifting the brushes on the commutator, so that they draw away from the maximum point, decreasing the potential. When more lights are turned on, the reverse action takes place. The current governing the regulator is cut in and out by means of a pair of electro-magnets, termed the controller magnets, connected with the regulator magnet of the dynamo.

Sparking at the commutator is reduced by a blower being so placed that it sends a current of air directly on to the point of contact of the brushes and commutator which blows out the spark.

The largest machines have an electro-motive force of 3000 volts, and will maintain 63 arc lights in a single circuit.

1000 K.W. Three-Phase Rotary Converters.—The rotary converters built by the General Electric Company have many of the same features of structural detail that distinguish the direct current generators of the same make. The external yoke of

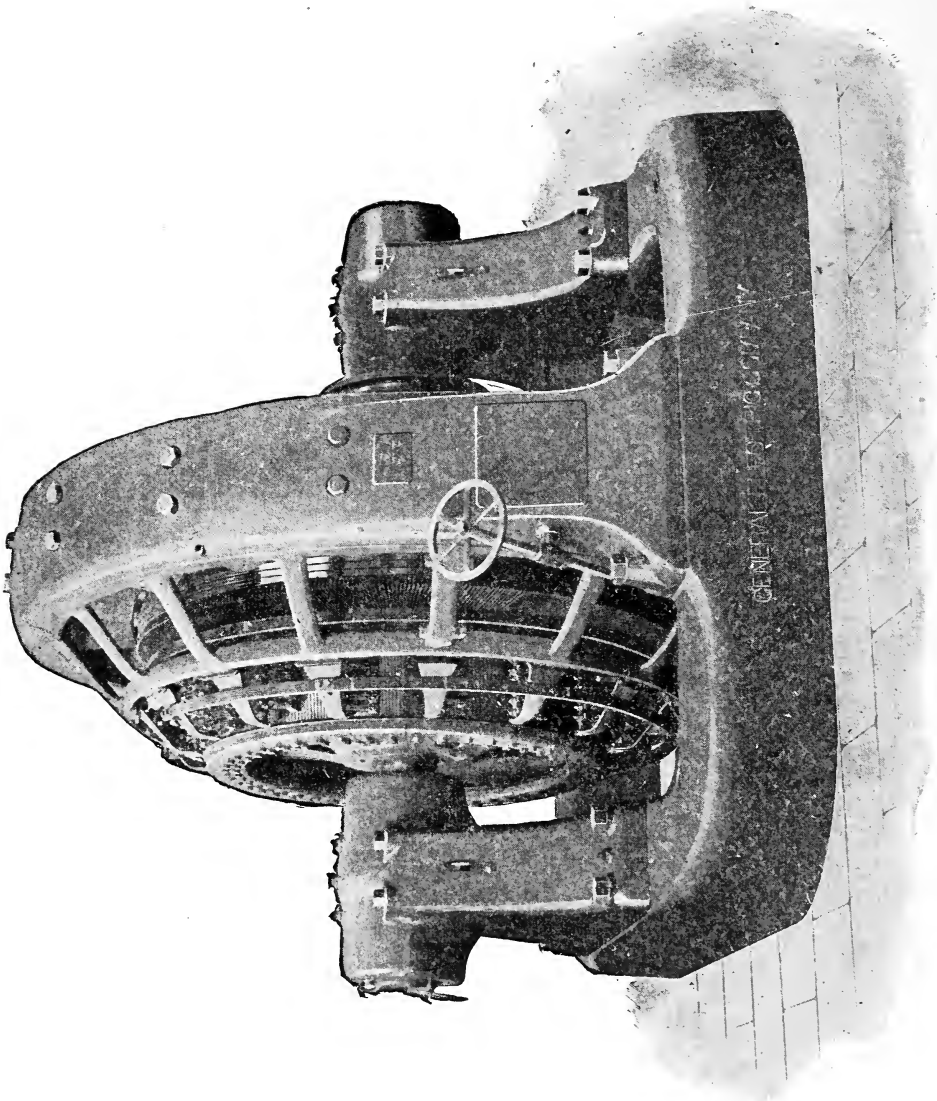

100 K.W. THREE-PHASE ROTARY CONVERTER.

the field frame is made of cast iron, and its upper half is fastened to the lower half by bolts hidden completely within recesses cored in the side supports, thus doing away with unsightly projections and improving the appearance of the machine. The poles also embody the same features as those of the generators, being solid steel castings bolted to the yoke ring so that any pole can be removed for the repair of its winding without disturbing the yoke ring.

The poles have extending tips, which distribute the magnetism over a greater number of armature teeth and thereby reduce the density, the iron losses, and heating in this part of the machine. The fields may be shunt or compound wound to obtain the desired regulation, and the effect of the series coil may be adjusted by a variable shunt exactly like that used on direct current generators.

The armatures are, as a rule, bar wound, upper bars being connected to the lower bars by soldered clips on the collector ring end of armature.

Alternating Current Apparatus.—The most important advance that has been made in incandescent lightning from central stations is the introduction of the Alternating Current system. By its use, the difficulties hitherto experienced in long-distance incandescent lighting are completely obviated, and it is now possible to fur-

nish a reliable and efficient service over large areas from a central source of supply, with an economy which will commend the system to any company proposing to do an incandescent lighting business.

The Alternating Current System may be described briefly as one in which is employed a dynamo machine producing alternately currents of high electro-motive force or pressure and transformers in which are produced currents of lower E. M. F., these secondary or transformer currents being utilized in the lamp circuits.

By reason of the high pressure or electro-motive force employed in the primary or dynamo circuit the necessary electrical energy may be conveyed to the points at which it is to be used for the lamps over very small wires as compared with those required for the Direct or Low Tension Systems, so called, which have heretofore been exclusively used for incandescent lighting.

Reaching a point at which lights are to be supplied, the high pressure current is passed through a Transformer or Converter.

The Transformer consists in effect of two coils, one of fine, the other of coarse wire, both wound on the same core of soft iron plates. See illustration on page 63.

The high pressure current coming from the dynamo traverses the fine wire coil (called the "primary" coil) of the Transformer, and though not

in contact or connection with the coarse wire coil (called the "secondary") produces in the second ary, by the electrical effect known as induction, an electric current differing, however, from the current in the primary coil, in that it is of low potential or pressure and suitable for use in the incandescent lamps.

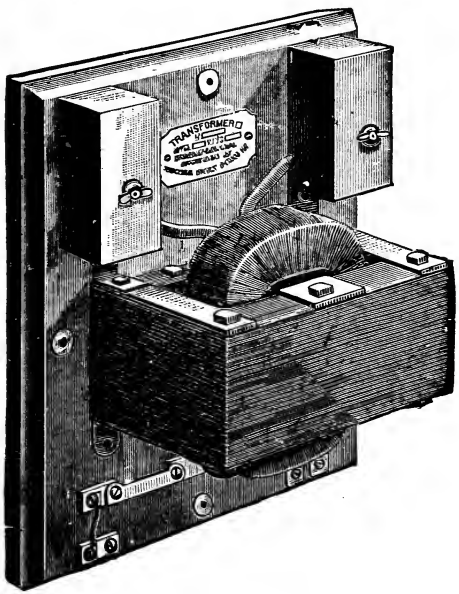

THE THOMSON-HOUSTON TRANSFORMER.

From the Transformer lead the circuit wires to the building to be lighted, and the lamps are connected in the customary multiple arc or parallel precisely as in the Direct System, taking the transformer as a source of supply instead of the dynamo.

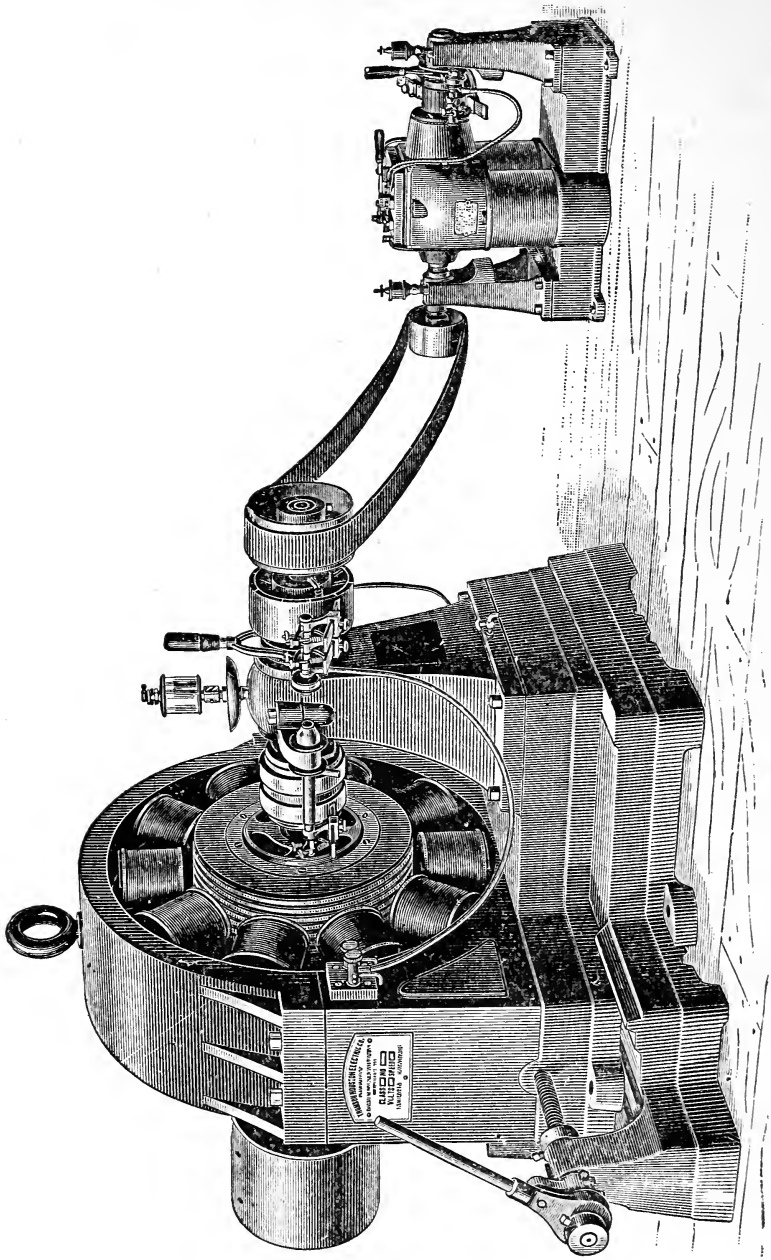

THOMSON-HOUSTON ALTERNATING CURRENT DYNAMO.

The Thomson-Houston Alternating Current Dynamo shown in the illustration differs very materially from the well-known type of machines made by this company, but has the same characteristics of excellence and embodies new and original ideas in dynamo design.

The Thomson-Houston Electric Company recognizing the advantages of automatic regulation have produced a machine that, differing from any other on the market, is absolutely self-regulating for all changes of load, keeping the lights at a constant brilliancy. This is accomplished by an arrangement of the coils on the field magnets of the dynamo, called a "composite field."

A part of the magnetic field is maintained by means of current from a separate or exciting dynamo. If the load upon the outside circuit is increased, it is necessary to increase the magnetism of the field in order that the machine may in turn supply the increased demand in the circuit and the lights remain steady.

This is accomplished in other machines by varying the current on the field magnets by a rheostat or variable resistance operated by hand. In the Thomson-Houston Dynamo, however, the same result is obtained entirely automatically by passing the greater portion of the main current through two or more of the field magnets, thus energizing the machine in exact accordance with the demands

made upon it. As an alternating current is not suitable for magnetizing the fields, it is necessary to change the character of the current produced in the armature to a direct current before passing it through the special winding on the field; and this is done by a commutator at the end of the shaft. By this regulation the attention required at the dynamo is reduced to a minimum, while at the same time the efficiency of the machine is increased, and any number of lamps from one to the full capacity may be thrown on or off without in any way affecting the steadiness and brilliancy of those remaining.

To allow for a pre-determined percentage of loss in the wiring, it is necessary, as the load is increased, that there should be a definite amount of increase in potential, which is accomplished by placing around the field winding for the main current, a resistance which shunts that portion of current not required for regulation.

The coils for Field Magnets are wound on spools which are slipped over the castings and fastened firmly in position. These being well protected, the liability of mechanical injury is reduced to a minimum. In case it is necessary to replace a coil or to remove the armature, the upper half of the field casting can be readily removed, leaving the parts easily accessible.

The potential of the alternating current requires

that the utmost care be used in design and construction of the armature. It is wound with one layer of wire, ample provision being made for insulation between the wire and the iron core, as well as between the separate coils of which this layer is composed. These coils are carefully covered by a material possessing high insulating and protective qualities, and the whole is held in place by bands very firmly wound and fastened. The form of the core is such that perfect ventilation is secured, thereby entirely obviating any tendency to overheating.

The Collectors consist of two copper rings from which the current is conducted by means of narrow brushes, which require no adjustment, beyond that of the tension springs governing the pressure of the brush on the collector ring.

The dynamo is supplied with a cast-iron base, or bed-plate which is provided with a ratchet belt tightener.

For the purpose of energizing the field magnets the dynamos are furnished with small Exciting Dynamos of the direct current type. It has been found desirable in some special cases to make the smaller sizes of Alternating Current Dynamos self-exciting, and to this end the armatures are wound with an extra or special coil for furnishing current to energize the fields.

The Exciter is usually placed as shown in the cut, behind the alternating dynamo, driven by a belt from a small pulley attached to the armature shaft. One Exciter is usually employed with each Alternating Current Dynamo, but when several dyamos are operated in the same station it is often found more convenient to employ Exciters, any one of which is of sufficient capacity for all the machines. By this arrangement an accident to one Exciter need not affect the general service.

As previously stated, when lights are required to be supplied at different degrees of voltage or pressure it is necessary to use what is called a transformer, which is made on the principle of the induction coil. Having two coils, a Primary and a Secondary, and is operated by induction. By induction, we mean: "A current is said to be induced in a conductor when it is caused by the conductor cutting lines of magnetic force. A fluctuating current in a conductor will tend to induce a fluctuating current in another running parallel to it. A static charge of electricity is induced in neighboring bodies by the presence of an electrified body. A magnet 'induces' magnetism in neighboring bodies."

By sending the current from the dynamo through the smaller or primary wire the voltage is lowered in the secondary coil with a corresponding increase of quantity, or by sending the current through the

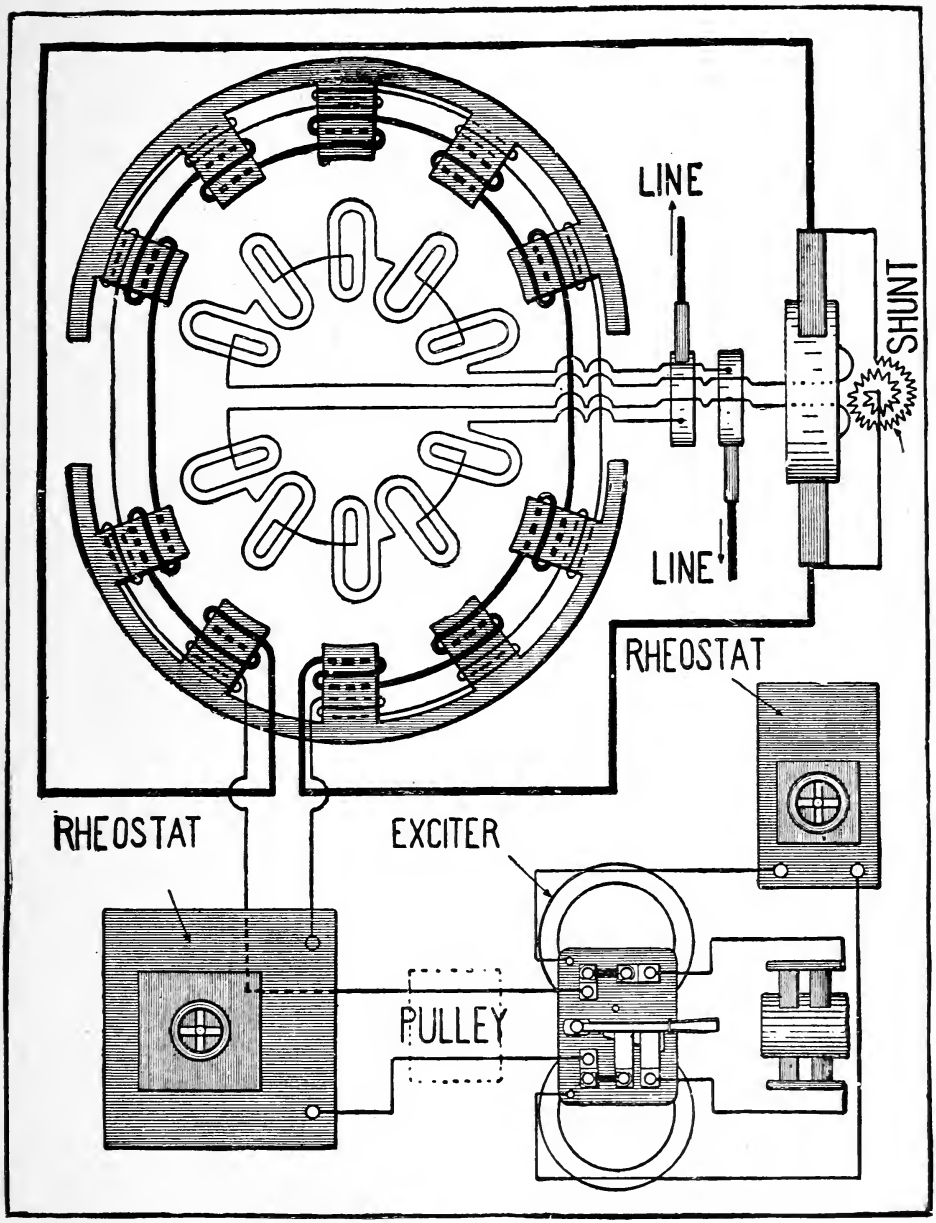

FIGURE 4.

larger or secondary coil; the current in the primary coil is raised in voltage, but is less in quantity.

The two coils are carefully insulated from each other and from the iron core, thus preventing the high potential current from reaching the secondary or house line. As an additional security, in case any such connection is made, there is included in the secondary wiring of each transformer a Thomson Automatic Protective Device which, in case of contact between the primary and secondary coils, will cut the transformer out of circuit.

Transformers are made which may be used in connection with lamps of either 52 or 104 volts, it being necessary only to change a connection in the transformer for a change in the potential of the secondary circuit. A weather-proof iron case contains the transformer, with the necessary safety fuses and connections for the primary and secondary wires. A special arrangement makes it possible to cut the transformer out of circuit while replacing fuses.

The Station Transformer is used for supplying current for the potential indicator and lamps upon the switch-board.

A diagram of a composite-field dynamo and connections is given in Fig. 4.

The Westinghouse Alternating Current Dynamo for generating the alternating current is represented by the accompanying illustration.

The field is composed of a series of radial pole pieces having alternate polarity, the cores of which are cast solid with the base and cap respectively. The field coils are a series of bobbins, each independent of all the others, which are wound on shells, slipped over the pole pieces, and held up by bolts at the periphery, and these bobbins are supplied with a feeble current from the exciter.

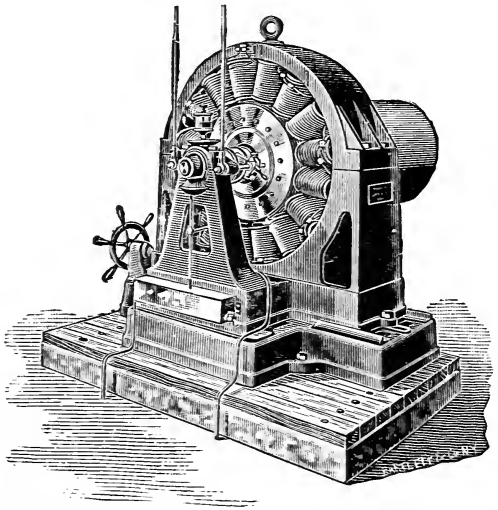

THE WESTINGHOUSE ALTERNATING CURRENT DYNAMO.

The body of the armature is of laminated iron plates freely perforated for ventilating purposes. A single layer of wire is wound in flat coils back and forth across the face of the armature, in a di-

rection parallel to the shaft, being retained by stops on the ends of the armature. Mica and other adequate insulation is provided, and the whole is wrapped with binding wire. A ventilator is attached to each end of the armature and draws a strong current of air through it.

The total weight of copper on a 750-light armature is 16 lbs., disposed in a single layer, which being on the surface is readily kept cool, and which can be inspected for deterioration or flaws of any character. A direct current armature of type most generally in use of 750 lights capacity, on the other hand carries more than ten times this amount of wire.

The Brush New Alternating Current Dynamo.—The underlying principle of the Coreless Dynamo here illustrated, was discovered and applied by Mr. Brush.

In this machine the field magnets revolve, while the armature remains stationary.

A brief examination shows that it is of the alternating type; that its field magnets are many and carried by the shaft; that the armature is fixed and absolutely free from any magnetic material; that its parts are easily accessible, and that an armature coil may be cut out, removed or replaced without stopping the machine.

The machine chosen for illustration and descrip-

tion has an output of 60,000 watts; it supplies current for a thousand 16-candle power lamps.

The shaft bearings, bearing standards, base plate and armature slides are cast in one solid piece. The centre line of the shaft is 16 and 11–16 inches above the surface of the base plate, high enough for access to all parts of the dynamo, and low enough for steadiness and freedom from strain

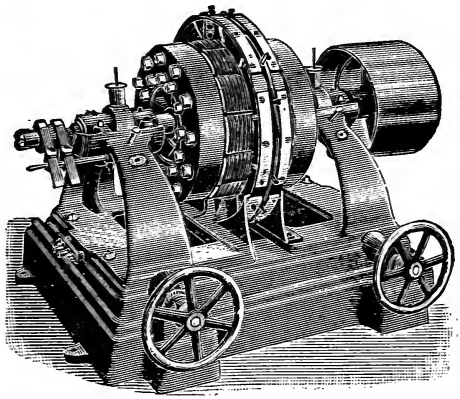

THE BRUSH ALTERNATING CURRENT DYNAMO.

on foundations. The 4-inch steel shaft (tapering to three and a half inches in the bearings) carries two heavy cast-iron yoke pieces, 27 inches in diameter. To each of these are screwed, at equal radial and circumferential distances, the wrought-iron cores of 12 magnets of alternating polarity. The two yoke pieces, with their bolts, washers, etc., weigh about 950 pounds; the magnet cores, 308; the magnet wire, 400. Thus the whole rotating

mass of cast-iron, wrought-iron and copper, acts as a fly-wheel weighing more than 1700 pounds, and tending to neutralize any variation in the speed of the prime generator. As the nominal speed of the machine is fewer than 1100 revolutions per minute, the structural strength is more than sufficient to meet all demands made by centrifugal force. Further than this, the mechanical stress is less when the magnets are excited than when the alternator is running without load, as the lines of magnetic force between the faces of opposing poles, tend to counteract centrifugal force.

But the most interesting part of the alternator is the fixed armature shown in the full page engraving. The vertical disc is occupied by flat armature coils, made of insulated copper ribbon wound on porcelain cores. The copper ribbon of each coil is reinforced on either side with strong insulating material of the same thickness as the porcelain. One of these reinforcements is grooved, and the other tongued. The coil, consisting thus of core, ribbon, and reinforcements, has an angular width of 60 degrees. The upper part of each face of each coil is covered with an insulating plate, 5-16 of an inch thick. The coil thus built up and insulated is set in German silver holders, cut from true turned rings and held together by sunk-headed screws, as shown in engraving. Each terminal of

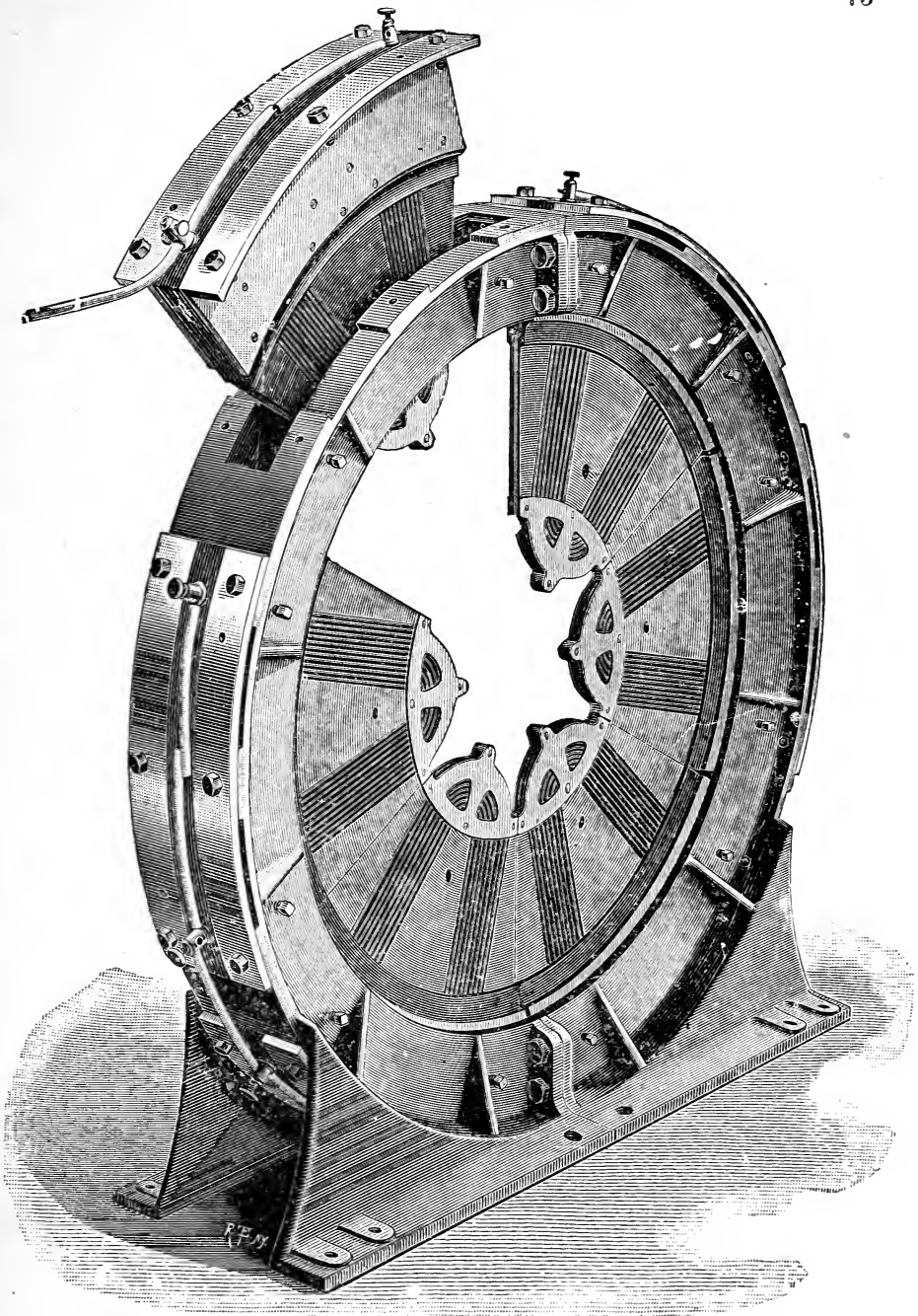

ARMATURE OF THE BRUSH ALTERNATING CURRENT DYNAMO.

the copper ribbon connects with a binding post as shown.

The six armature coils thus mounted are carried in a German silver frame consisting of two semi-circles bolted together on the line of the vertical diameter. The cross-section of this ring frame is girder-like. Into the slots of the frame-slip the six-mounted armature coils, the tongue on the edge of the one engaging with the groove on the edge of the next. The coils thus thrust into the intense magnetic field constitute a disc, 9-16 of an inch in thickness, and with an opening in the centre, through which passes the revolving shaft. As there is no magnetic metal in the armature, there are no local currents to waste the energy.

The several coils are insulated carefully, and the stationary armature, as a whole, is insulated from the bed-plate on which it rests. The coils are joined in series, the binding-posts adjacent to any radial line of division between the two coils constituting fixed terminals for the main line. There is no commutator; there are no collecting brushes to take the alternating current from rotating parts.

The resistance of the armature coils is so low that it would seem impossible for one of them to burn out. But if one should, it may be removed and a new one readily put in its place in three minutes, or the injured coil may be shunted out of the circuit and the dynamo kept running with the other

five until the time for shutting down. The coil section, complete, weighs about 20 pounds.

In action, the 24-field magnets of the alternator are excited by the direct current from an 11-inch Brush dynamo of the well-known form. This exciting current is carried to the brushes that rest upon the two uncut insulating rings, and thence through the hollow shaft to the magnets. A rehostat worked by hand or automatically is placed in the shunt-circuit around the field magnets of the exciter, so that perfect regulation is secured without readjustment of the brushes or any necessity of handling the high-tension alternating circuit.

The Brush-Pfannkuche "coreless" alternator is built at present for an E. M. F. of 2000 volts.

On the following pages are given complete directions for making a small dynamo and motor for experimental and laboratory use. A machine that is not a toy, but capable of affording continual interest and profitable research, would be prized by any one of mechanical inclination.

So many and curious are the applications of electricity that to realize their utility and significance, even faintly, is possible only by personal experiment and repetition. A set of chemical batteries can be called upon to supply a current of electricity, but such paraphernalia is inconvenient and expensive. Besides, the modern, and only

practical method of generating the current is by dynamos.

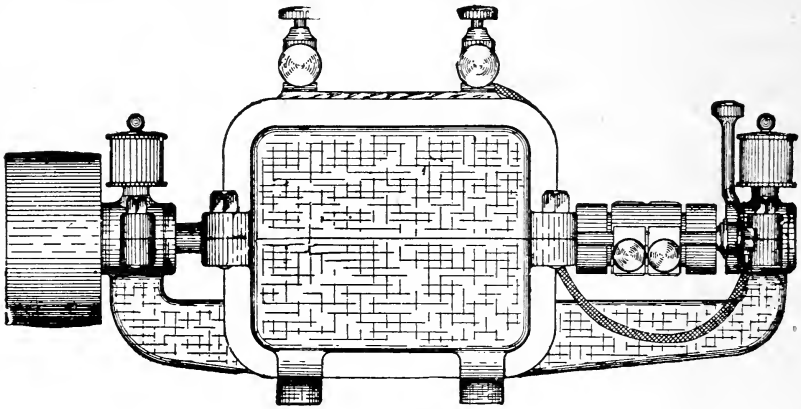

FIGURE 5.

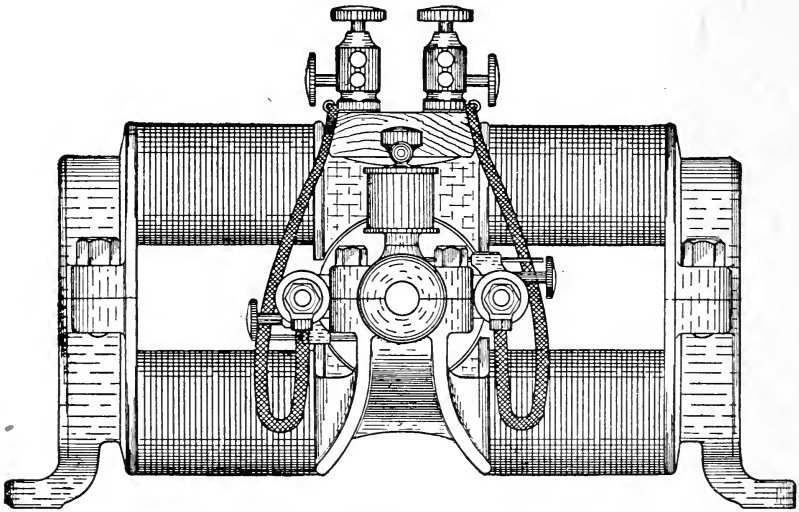

FIGURE 6.

Motors, much like dynamos in construction, run our work-shops and railways. The young candidate for electrical qualifications may consider that

he has passed excellent preliminary examinations if he constructs and owns a practical dynamo.

Figures 5 and 6 in this article show a dynamo (or motor) of simplest design, but a marvel of adaptability. The frame, comprising the field magnets and supports for the armature bearings, is in but two pieces. The armature is made of one piece of iron, with one coil of wire. Yet this small machine will require one-man power to drive to its full capacity, and will make a very energetic motor. It will generate a current, whether turned in one direction or the other. As a motor it can be made to run at will in either direction. Furthermore, it is capable of doing what seems impossible—it can furnish a current in a continuous or alternating direction. No laboratory or electrical cabinet is complete without some means of getting an alternating current. For a continuous current the brushes rest on the commutator, as shown in the cut. In this case it is self-exciting; that is, the dynamo is complete in itself and magnetizes its own fields. By running one brush on each of the rings, shown on each side of the commutator, and "separately exciting" the fields from some other source, an alternating current is available. By another arrangement of internal connections the commutator and collector can be capable of making a "self-exciting, alternating current dynamo."

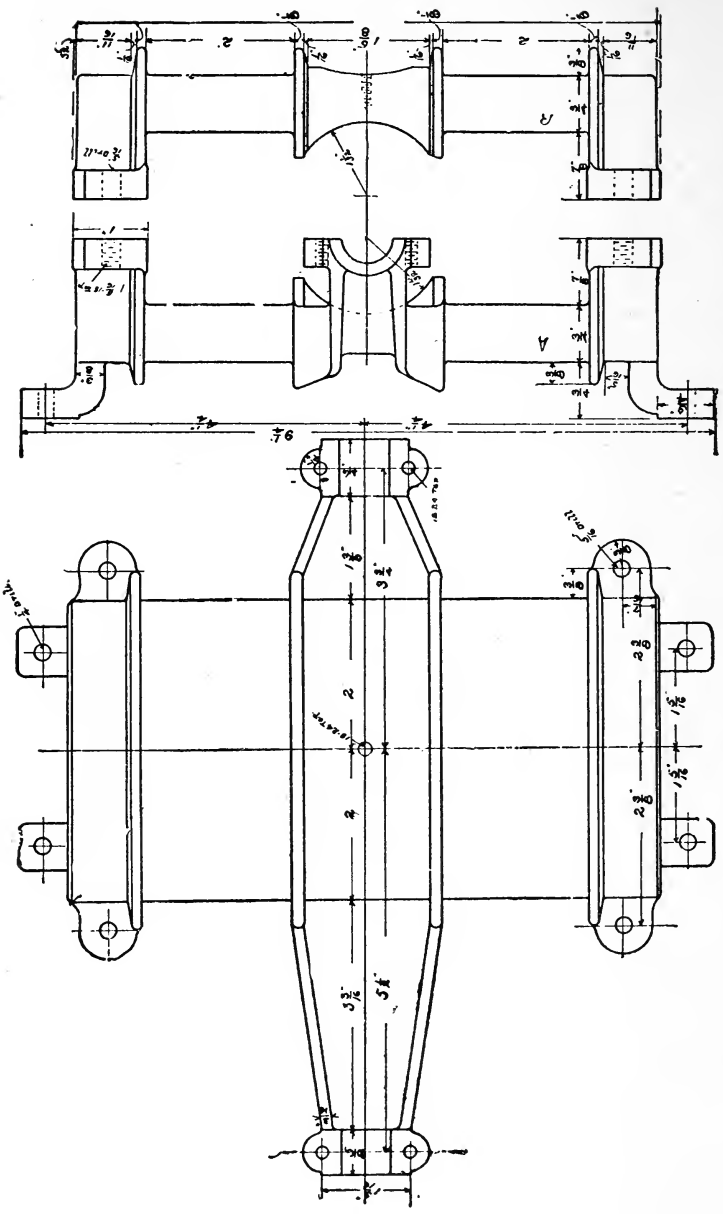

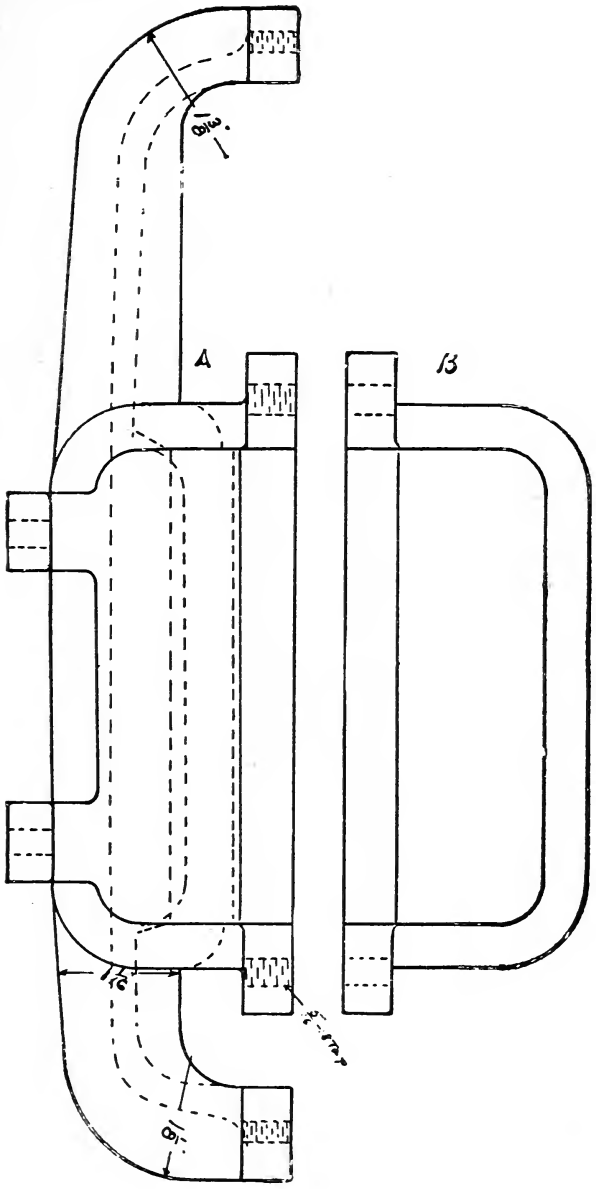
A
B

Such a combination is not attempted by any machine now on the market.

By winding proper sizes of wire on the armature and field cores, any strength, or "potential," of current can be obtained. For ordinary uses a current of 25 volts will be found convenient. No. 18 wire on the armature, and No. 14 on the fields would do this.

At this potential eight ampéres could be secured. A higher potential, but less current would result from use of fine wire, or a lower potential and more current with larger wire.

The working drawings with dimensions show the construction so clearly that a detailed description is almost superfluous. Making the patterns is tedious, and perhaps inconvenient, and with foundries distant, it may be impossible for each one working independently to avail himself of this article. By clubbing together, only one set of patterns would be needed, and castings obtained at low rates.

The upper and lower parts *a* and *b* of the frame, the caps for the bearings and the pulley are of common cast-iron ; the armature of annealed cast-iron. The rest of the metal parts, except the shaft, are of brass.

In making this machine, the four legs are first to be filed or planed flat, to secure a firm rest on the planer. For the next step, plane the parts where the halves of the fields bolt together, and where caps

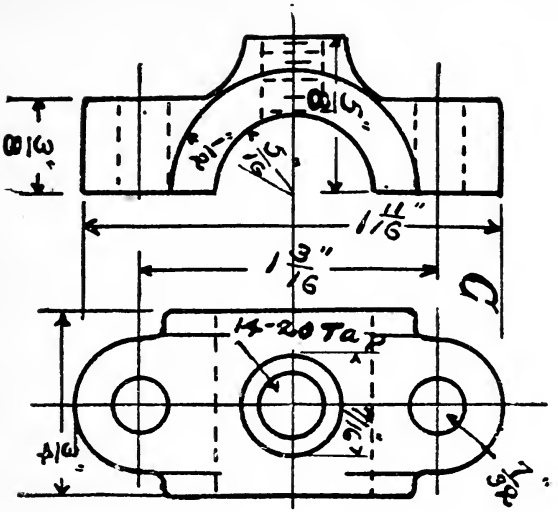
1 11/16"
1 3/16"
C
1/4-20 Tap

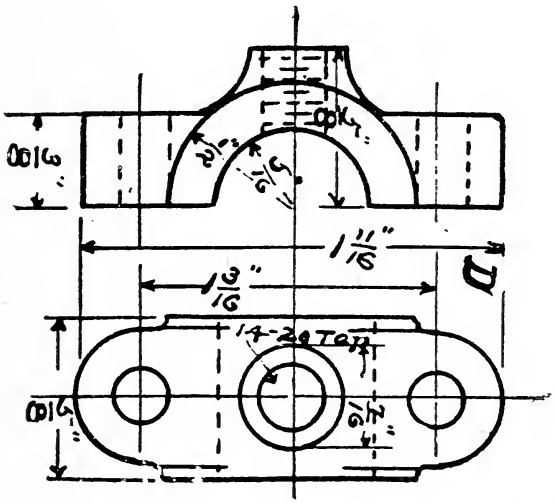
1 11/16"
1 3/16"
D
1/4-20 TAP

screw on. The holes may then be drilled, tapped, and screws inserted. After the caps *c* and *d* are tightly screwed in place, the builder may proceed to bore out the $\frac{5}{8}$-inch holes where the bearings of the armature shaft are to rest. This can best be

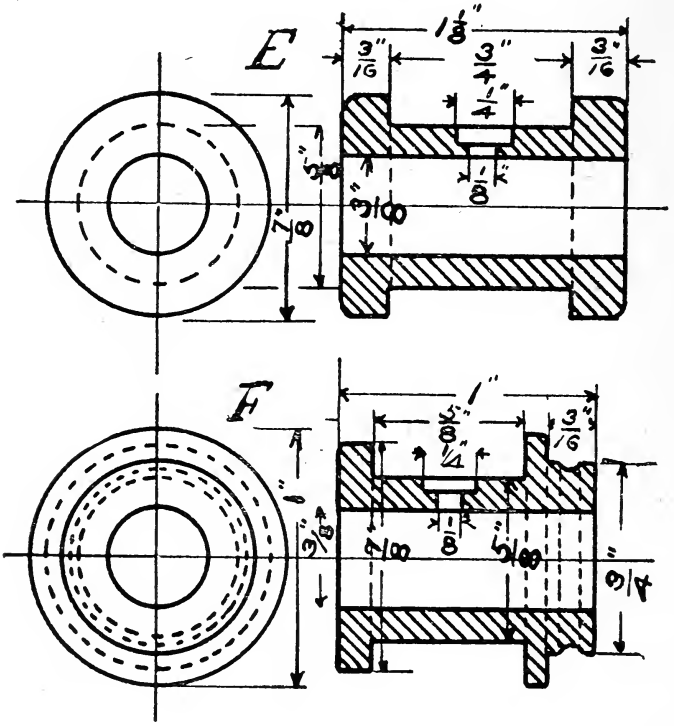

done with a boring bar in a lathe. Or these may be drilled between lathe centres, if the holes are afterwards reamed together to insure exactness. The outside and inside rims should be faced smooth that the linings may fit nicely.

To bore out the fields is usually troublesome; but in this machine the boring is easily accomplished. After the arms are finished, as first directed, a boring bar $\frac{5}{8}$-inch in diameter, with a cutter head in the centre can be laid in place, using the arms as supports. The boring to size can then be done in any screw cutting lathe.

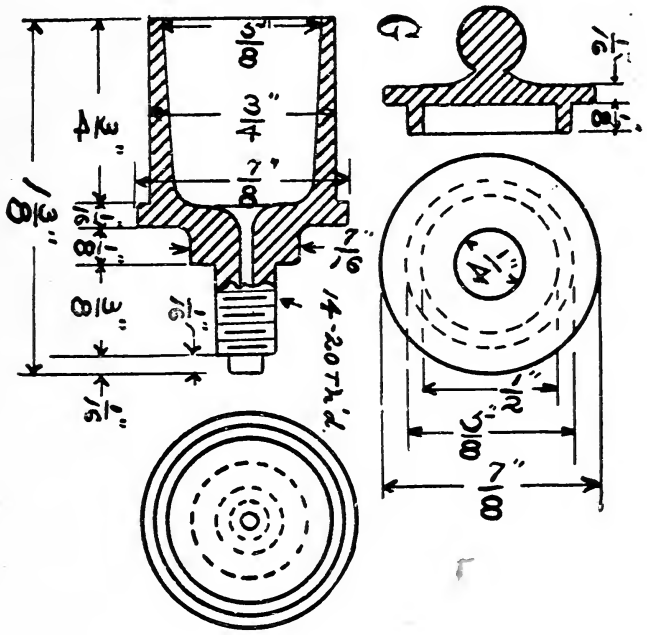

Hard brass or gun metal is suitable for the bearings or lining *e* and *f*. These are to be made in one piece each, instead of in halves. They are thus easily made, and cheaply replaced when worn out. The oil cups *g* enter the small hole in the top and prevent the linings from turning

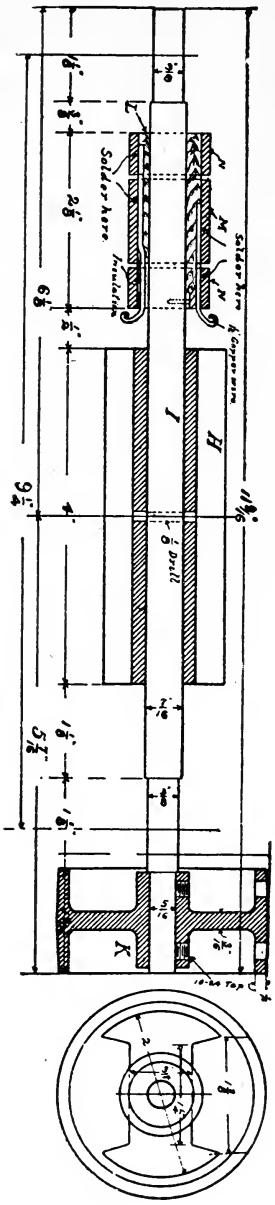
Solder here
Insulation
Solder here
Copper wire
I
H
K
Drill
10-24 Tap

The armature casting *h* should be annealed by heating to a bright red, and then cooled slowly for several hours. Drill the $\frac{7}{16}$-inch hole through the centre and drive it upon a short arbor for turning. The outside diameter is to be just 2 inches. As the field bore is $2\frac{1}{16}$-inch, there will be, when the armature is in place, $\frac{1}{32}$-inch clearance. Turn the shaft *i* to its specified dimensions and drive the armature tightly on the centre portion; a few $\frac{1}{8}$-inch steel pins will insure non-loosening. The pulley *k* is to be fitted to the 5-16-inch end of the shaft and held in place by two set-screws butting on flattened spots.

As it is difficult to work copper, brass can be used for the commutator and collector. Boxwood or hard rubber will make a good hub. The commutator or centre portions *m* should be first made. Fit the tube tightly to the centre, and put in the small screws; then remove the tube and saw it in halves. Groove the wood for the connecting wires and fit on the two collector rings *n*. Again remove the brass tubes and solder the connecting wires in place. One wire is to connect with the inside ring and one commutator segment; the other wire with the outside ring and opposite segment. A small pin should be put in the shaft to keep the commutator from slipping. Make the position of the division between the commutator segments as shown in the figure.

Fit the yoke *o* to the inside rim of the short lining and tap the hole for the set-screw *p*. Studs or spindles *q* for the brush holders, enter the ends of

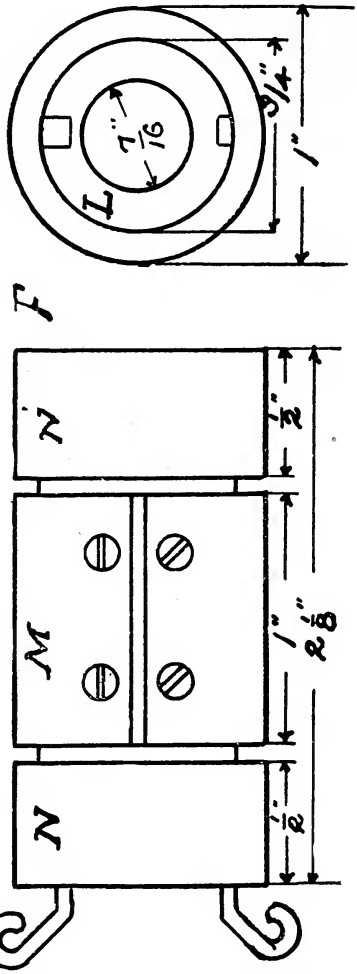

the yoke suitably insulated with hard rubber washers and bushings *r* and *s*. Three pieces only are used to form the brush holder, — an outside part *t*,

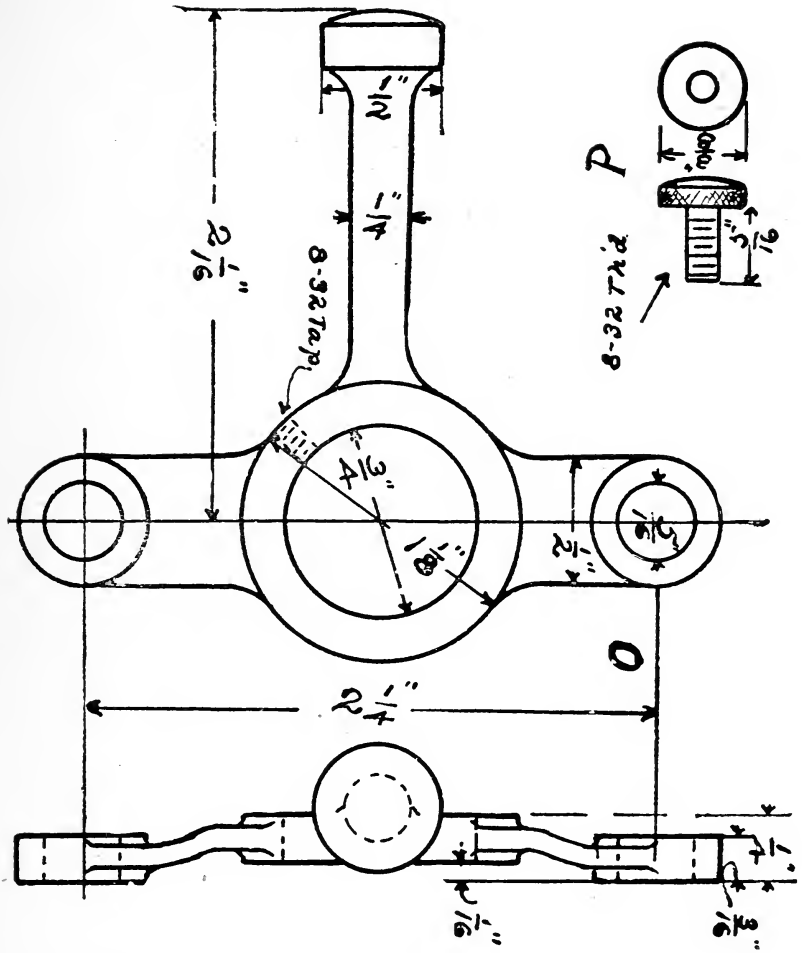

and inside part *u*, and the screw *v*. When the screw is tightened the brush *w* (of leaf copper), and stud *g* is tightly clamped. The brass ears *x* into which the flexible cables are soldered, are opened to the centre hole to allow easy removal.

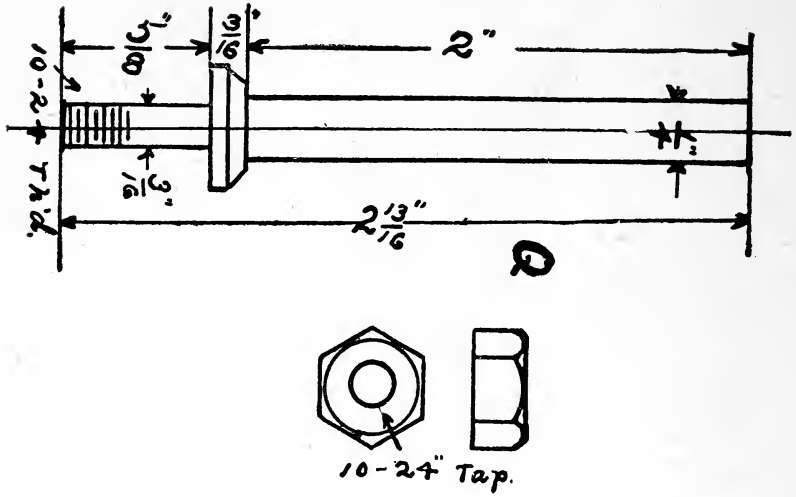

A maple connection board *y* surmounts the machine. One screw in the centre is sufficient to hold it. The brush holder cables end at two of the binding posts, the field wires at the other two.

The builder is now ready to wind on the wire. File off any roughness on the iron, and insulate with several layers of manilla paper well shellaced. The armature is to be wound like a shuttle until filled, with No. 18 double cotton covered magnet wire; about 1-½ pounds will be required. The four sections of the field will take, in all, eight pounds of No. 14 wire. Each section is to be wound in the opposite direction from its neighbors, in order to make consequent poles around the armature.

Fig. 7 represents a diagram of the winding.

R

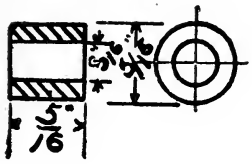

S

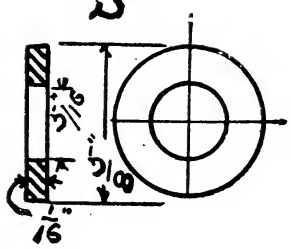

T

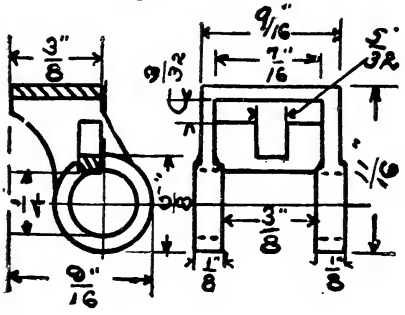

U

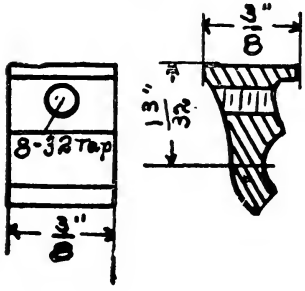

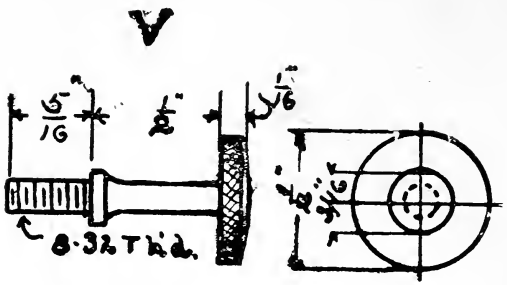

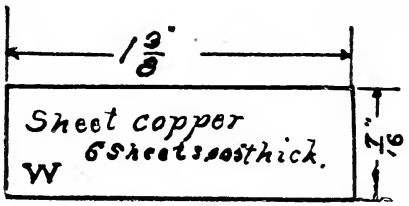

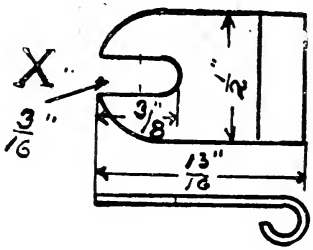

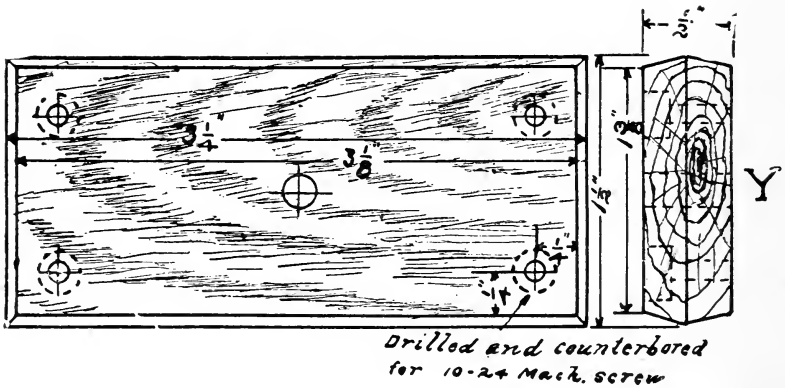

Drilled and counterbored for 10-24 Mach. screw

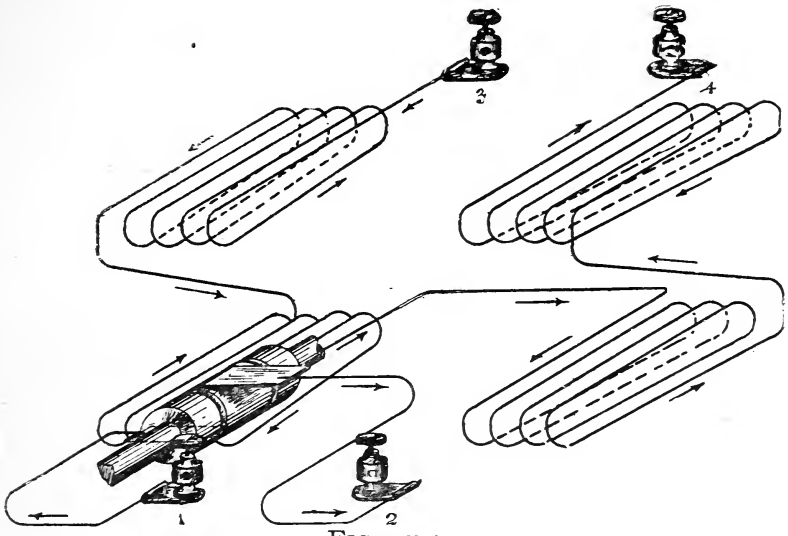

FIGURE 7.

When used as an ordinary series machine the line wires enter 1 and 3, or 2 and 4, the other two being connected with a short wire. The diameter in which the dynamo runs is determined by these connections. The same holds true when used as a motor. If an alternating current is desired, the line is supplied from 1 and 2, while a separate current must be supplied to 3 and 4 to magnetize the fields. Only two brushes are to be used, one on each collector ring.

In case a self-exciting alternating current dynamo is built a specially connected commutator-collector and yoke are used.

Fig. 8 clearly shows the connections. Six brushes are necessary. The alternating current generated in the armature first passes to one of the commu-

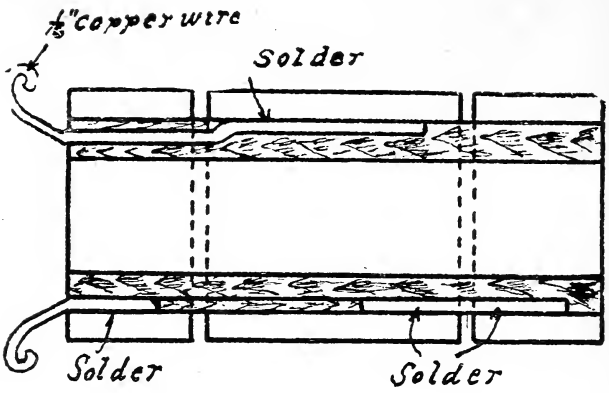

COMMUTATOR FOR SELF-EXCITING ALTERNATOR.

tator segments, then from one set of brushes, in a continuous direction through the field winding back to the other set of brushes. By contact of these brushes alternately with one segment, then the other, the current is directed alternately again into the outside collector ring, through the line wire, back to the other ring, and the circuit is completed.

Other forms of armatures can be designed for use in these fields, a drum, or even a ring armature with many segments in the commutator. The field winding may be made shunt, especially for running incandescent lamps. Even a compound field is possible.

For continued use, this dynamo would be driven from a line of shafting; but for experiments of a few minutes' duration hand or foot power is admissable.

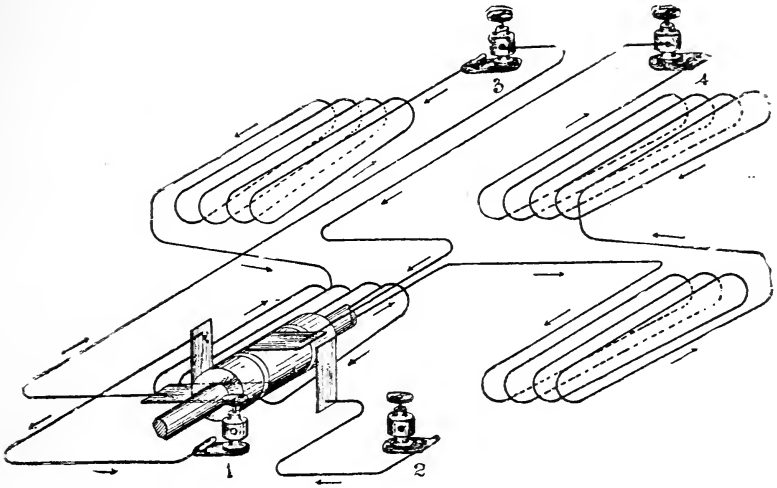

FIGURE 8.

Fig. 9 represents a simple contrivance for driving by hand. A cast-iron frame, light but well ribbed, is secured to a board or table a few feet from the dynamo by two thumb screws. A wheel 15 inches in diameter, 1 ½-inch face, driven by a

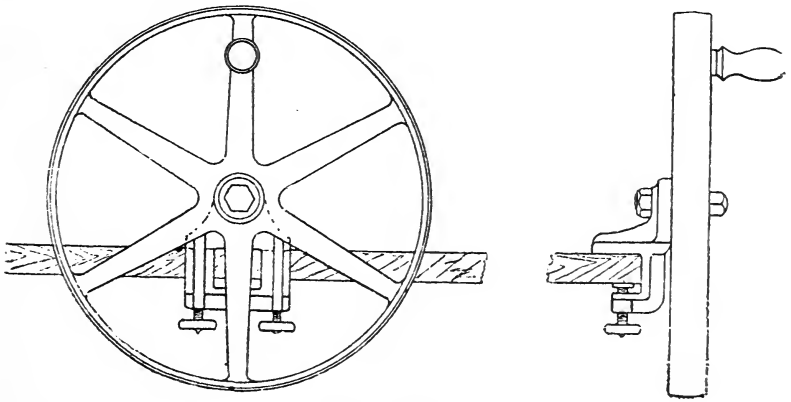

FIGURE 9.

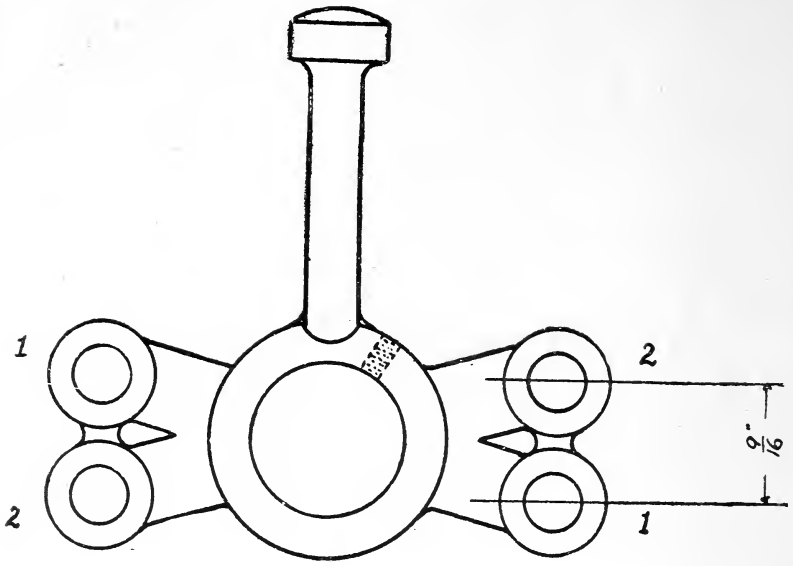

Yoke for Self Exciting Alternator
Nos. 1 and 1 are for commutator brushes
" 2 " 2 " " Collector "

handle on one of the spokes will get up sufficient speed to run two 16-candle power incandescent lamps, or to run a small arc lamp.

Various means have been devised for transmitting power from the steam engine to the dynamo, as using different kinds of belts, or connecting the shaft of the dynamo directly with the shaft of the engine, the object of each method being to obtain a certain result. Belts are used for ordinary purposes, as in central stations, private plants, etc.

In electric lighting on steamships the dynamo is usually connected with the shaft of the engine, as

the motion of the boat would interfere with driving of the dynamo by loosening the belt.

An illustration of this is given below of the American Engine Company's system.

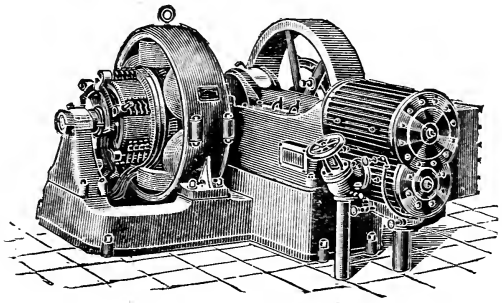

AMERICAN ENGINE COMPANY'S DIRECT CONNECTED DYNAMO AND ENGINE.

CHAPTER IV.

THE ELECTRIC ARC AND THE ARC LAMP.

In 1810 Sir Humphrey Davy discovered the phenomena of the electric arc. His description is as follows:

"When pieces of charcoal about an inch long and one-sixth of an inch in diameter were brought near each other (within the thirtieth or fortieth part of an inch) a bright spark was produced, and more than half the volume of the charcoal became ignited to whiteness; and by withdrawing the points from each other, a constant discharge took place through the heated air in a space equal at least to four inches, producing a most brilliant ascendant arc of light, broad and conical in form in the middle."

Of course the light did not last long, as the charcoal, being soft, burned rapidly away.

The necessary current was supplied by a battery of 2000 cells, with zinc and copper plates, the exciting fluid being dilute sulphuric and nitric acids.

Davy touched the charcoal points together

horizontally after attaching the wires to the battery, and then separated them. The stream of hot flames which followed or joined the points were deflected by air currents and took the form of an arch or curve, which gave the name to the phenomena.

There have been a great many ideas given in regard to the nature of the electric arc. Prof. Thomson says in his excellent paper, read before the recent convention of the National Electric Light Association, held at Providence, R. I.:

"Let an attempt be made to separate any part of a circuit in which the current is maintained by a sufficient e. m. f. or potential, and we find that if the separated ends are moved quickly we get a flash or spark of varying length, which becomes a flame of great heating effect if the current be of high rate of flow. If the separation of the two parts of the circuit be made slowly a continuous flame or discharge will take place between the ends if they be not too widely separated or so widely separated that the potential or pressure of the current is not sufficient to force current across the space. With considerable potentials and heavy currents a space of many inches may thus be bridged. Whether the separated ends be of iron, copper, carbon, platinum, zinc or other conductor, the hot discharge is still formed. Therefore, while the electric arc is generally spoken of as that flux

L. of C.

occurring between *carbon* ends separated, of course it cannot be so limited, and we frequently, therefore, refer to copper arcs, iron arcs, carbon arcs, to

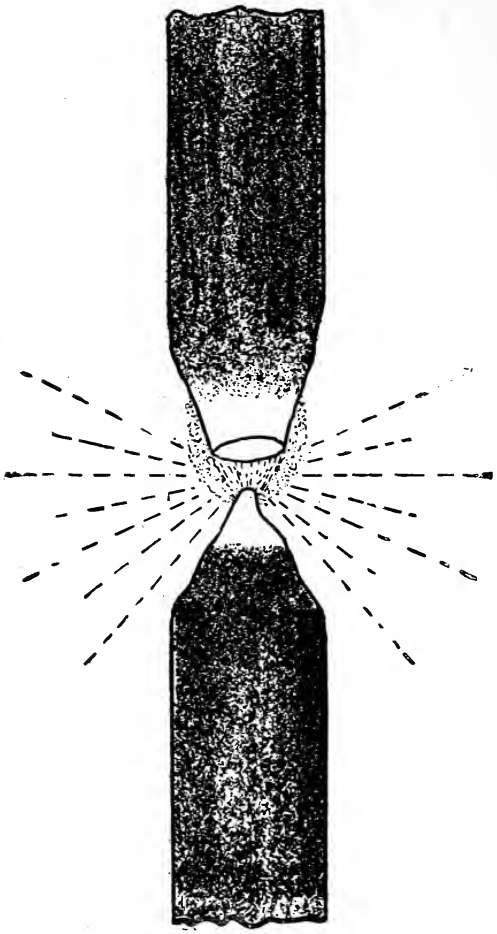

THE ELECTRIC ARC CARBONS.

distinguish one from the other. What, then, is the arc so formed? Is it heated air between the ends separated, containing detached particles of the

conductor in process of carriage, as was apparently thought for a long time to be the case? No, the arc proper is composed of a stream of vapor arising from the actual boiling or vaporization of the solid or fused ends of the separated conductors. In so far as the surrounding air mixes or combines with this vapor stream, it is modified by the presence of oxygen and nitrogen, but the air or any other gas is not essential to be present, and is merely incidental to the formation of the true arc stream in air. Indeed, it may seem strange to some to speak of vapor of carbon, copper, iron, platinum, etc., but their production is merely a question of temperature in any case. In the electric arc there is a real distillation of the conductors forming it, and this accounts for the variation of color and temperature to be found in different arcs. The copper arc evolves a peculiar green light, which is exceedingly trying to the eyes, as those who have experienced its effects well know. Zinc gives a whiteish blue, while the carbon arc proper is purplish in tint. The arcs from various metals give in the spectroscope the characteristic lines of the vapor of each metal.

As a curious incident, showing the presence of the metal vapor in the arc, I may mention the fact that when by accident a person has had a portion of his clothing bathed for an instant in a heavy copper arc caused by a short circuit of heavy cur-

rent mains, there has been found a considerable deposit of copper; enough, in some cases, to give the reddish color of copper to the surface bathed, which, if moistened, turns green by oxidation. It also gives a deep blue to dilute ammonia in which it is washed, thus showing the presence of copper. In like manner these metallic arcs will give a deposit of the metal on cold surfaces which they touch.

It appears to be the positive pole which gives out the vapor stream. With carbon the positive vaporizes steadily and is consumed much faster than the negative. In the use of the arc, however, for lighting, we have learned to distinguish what is called "a short arc" and a "long arc" system. In "short arc" systems the carbons are burned much nearer together than in the "long arc" systems. Let us suppose the case of two carbons touching each other with a current passing, and then that we very slowly separate them, stopping to observe effects. When the contact is light before actual separation, a visible heating of the meeting ends is seen. On attaining a small separation the space between seems filled with hot vapor and we have a short arc, where the separation is perhaps not over two or three one-hundredths of an inch. There is also noticed an active transfer of carbon from the flattened end of the positive, and a deposition of carbon on the end

of the negative carbon. This deposited carbou takes the form of a mushroom, and, after a time, breaks off. Meanwhile combustion goes on at both poles and wears away the sides of the positive carbon, while the transfer of carbon wears away its tip or crater. The burning also wears away the negative at the sides, while the tip is built up by the mushroom deposit from the arc. But the cutting in of the negative finally severs the mushroom tip and it falls away. Hence both carbons are eventually consumed. To develop a short arc there is required a little over half the potential that is needed for a "long arc," or about 25 volts, more or less, and therefore to give out equal heat energy in the arc the current must be double in the short arc over what it would be in the long arc. The short arc is subject to the objection of a continual frying sound emitted, and great variations of luminosity; it requires a very dense and hard carbon to conduct the current without great loss, and involves line loss of at least four times the amount with the long arc if equal gauge wires be used.

In fact, while in the past such arcs were common, their number is diminishing, as they are being replaced by the more efficient and completely developed arcs called "long arcs," which are so called to distinghish them from the "short arcs." Returning to our separating carbons we find that

as the space or arc is lengthened from the short arc condition we pass a stage of great flickering and unsteadiness, and a fluctuating potential between the carbons, and then reach the stage of the long or quiet arc. With ten amperes the separation may now be about 1-16 to 1-10 inch or more. Smaller currents require less separation and larger ones an increased separation. At this stage the arc is quiet, with good, pure carbons very steady, and the potential difference remains at about 45 volts, if, of course, the carbon is properly fed to make up for combustion. The perfect arc is really a beautiful phenomenon. While the positive carbon still loses by volatilization from its tip or crater, and by combustion from its sides, the negative gains no deposit, but wastes at a less rate than the other, and by combustion only. The carbon vapor carried off from the positive is consumed by the oxygen of the air before it can deposit on the negative. Hence the outer zone of flame, which can easily be distinguished from the central zone or arc flux proper, is probably a zone of combustion similar to that existing in ordinary flames. The removal of carbon by vaporization from the positive end gives rise to the crater or cup, which is so prominent a feature of carbon arcs produced by continuous currents. The size or area of the crater is a rough measure of current strength, but varies with

different qualities of carbon. With very long arcs the crater or hollowed end disappears and the ends become rounded. A well-formed crater with the arc of flame confined thereto means usually a steady light, since the chief source of light in an electric arc is from the positive crater, which shines like a diminutive sun and represents the hottest part of the arc. The vapor light proper, or flame light, is comparatively very feeble and of a purple quality in air. Hence the arc light is as truly an incandescent source of light as is the incandescent carbon filament, with the difference that to run the latter at the temperature of vaporization or boiling point of carbon, so to speak, means instant destruction, while by the necessities of the case the light obtained from the arc is chiefly that emitted from a surface of carbon at its temperature of boiling, or more correctly of sublimation at atmospheric pressure. This temperature is exceedingly high, and accounts for the well-known superior economy in light production of the arc over all other kinds of lighting.

The temperature of the positive carbon crater is so high that the carbon exists there in a soft or plastic condition, capable of receiving an impression like putty. I have proved this with very large arcs of 150 to 200 amperes, by suddenly forcing the carbons together when the current had been cut off, and finding that they would fit each other

perfectly, the negative impressing its form on the positive crater."

Thus you see that the electric arc is simply the heated vapor in the space between two electrodes, produced by a current of electricity leaping across it.

A great many interesting experiments have been made with the electric arc and perhaps our readers would be interested in the following article, entitled "An Experiment with the Electric Arc," by Wm. Stanley, Jr., which was published in a recent number of the Electrical World:

"Prof. Thomson's paper on arc lights calls to my mind an experiment in the laboratory some time ago with an alternate current arc, which presented a very beautiful illustration of the deflecting power of a strong magnetic field. Inside a hollow carbon tube about two inches in diameter was placed an ordinary seven-eighths inch carbon, separated from the tube by about one-quarter of an inch air space all around, except where it was held in place by an insulating ring, as shown in Fig. 1. A coil of wire connected in series with the carbons, and with a constant current transformer by a flexible cord, was mounted to a handle for convenient handling.

If an arc was started between the inner carbon and the concentric tube, and if the coil was approached parallel to the face of the carbons, the

arc revolved around the centre carbon after the manner of a pin-wheel. Reversing the face of the coil—that is, the direction of the field threading

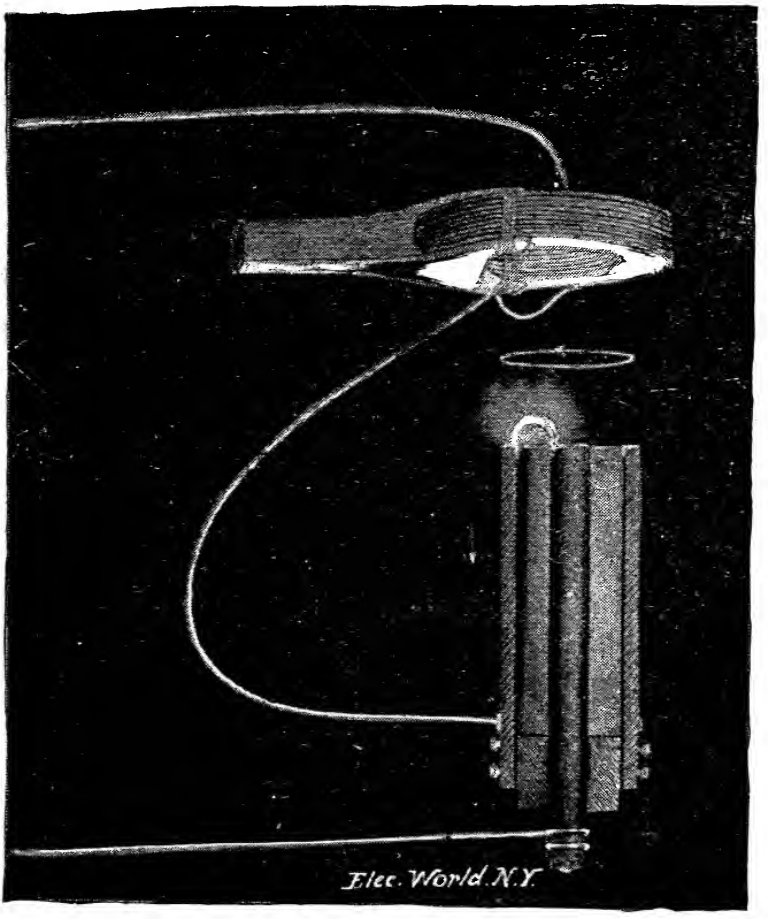

FIG. 1.—ROTATION OF THE ELECTRIC ARC.

the arc—caused an instantaneous reversal in the direction of rotation of the arc.

When the coil was placed around the concentric carbons and near the arc, the latter became distorted, as shown in Fig. 2, while it continued to revolve about the axis of the coil.

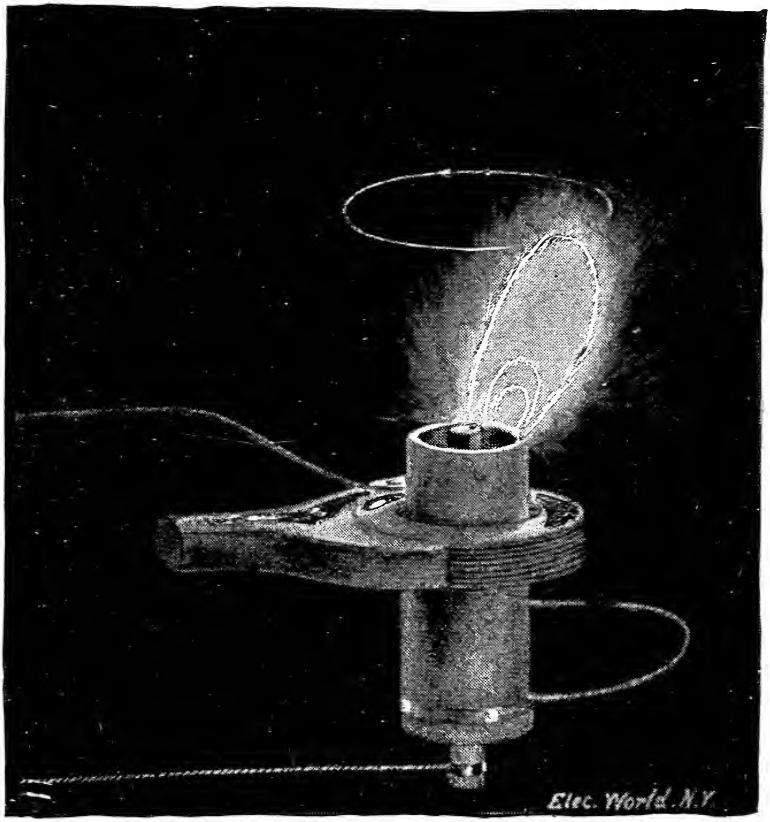

FIG. 2.—SIMULTANEOUS REPULSION AND ROTATION OF THE ARC.

Many modifications will suggest themselves to any one attempting the experiments. One point observed by Prof. Thomson was very clearly evidenced, which was that when the arc was

whirling (and it might be made to whirl so rapidly as to appear continuous about the centre carbon) the potential required to maintain a constant current rose enormously; so high, in fact, that the transformer was often unable to supply the demand for increased potential necessary to maintain the arc, although it was constructed to deliver a constant current from short circuit to 800 volts; as a consequence, the whirling arc would repeatedly blow itself out with a loud report if the deflecting coil was approached very near the seat of the arc. Of course, the arc revolves and becomes distorted because of the reactions between the field produced by the coil and the weaker field about the arc, and an apparent continuous effort exists between the two fields to coincide or join together. Many beautiful lecture and demonstration experiments for classes may be obtained from this same simple apparatus, which, of course, may be operated with equal success by either alternate or direct currents.

The Arc Lamp now in general use consists simply of two hard carbon rods, one above the other, and a mechanical contrivance to feed them.

It is necessary that the mechanism should start the arc by ceasing the pencils to touch and then separate them to the requisite distance for the production of a steady arc; it should also cause the

carbons to be fed into the arc as fast as they consume, and to approach or recede automatically, in case the arc becomes too long or too short; it should further bring the carbons together for an instant, to start the arc again if it should go out.

There are a great many forms of arc lamps, but the one in general use by a number of the large companies is the clutch lamp. This is a simple device, consisting of a clutch to pick up the upper carbon holder, the lower carbon remaining fixed. The clutch is worked by an electro-magnet, through which the current passes. If the lamp goes out the magnet releases the clutch, and the upper carbon falls by its own weight and touches the lower carbon. Instantly the current starts round the electro-magnet, causing it to act on the clutch, which grips the carbon-holder and raises it to the requisite distance. When the arc grows too long the lessening attraction on the clutch permits the carbon-holder to advance.

Fig. 3 shows the Brush Electric Co.'s arc lamp. This is a double-carbon lamp and when one carbon has burned out the current is shifted automatically to the other, thus making the life of the lamp twice as long.

Fig. 4 shows the new short arc lamp of the Thomson-Houston Co. This lamp differs from the long lamp, by having quite a novel feeding apparatus. The upper carbon clutch is attached

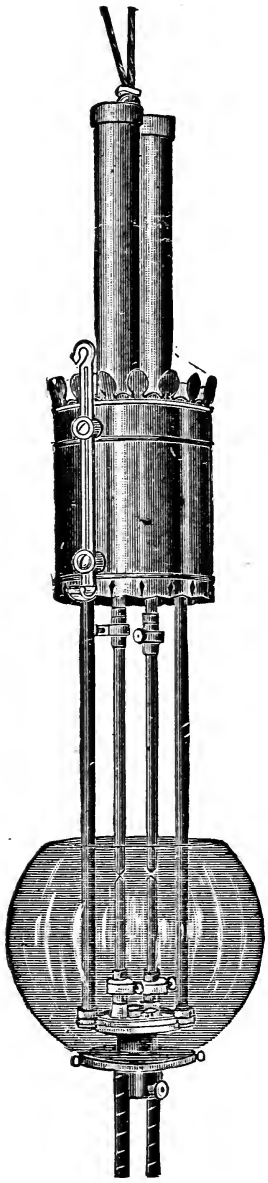

FIGURE 3.

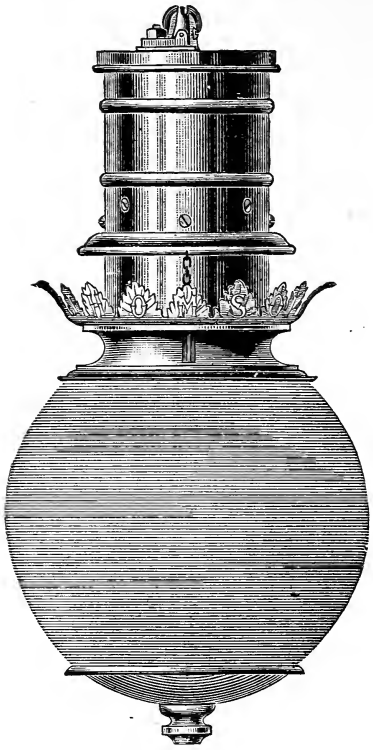

FIGURE 4.

to a brass ribbon, which is wound around a wheel having a ratchet and pawl, operated by an armature and an electro-magnet. The ribbon is unwound in this manner, feeding the upper carbon into the arc as fast as needed.

Arc lamps are usually operated in series, that is, the wiring is so arranged that the whole current starts from the dynamo and continues through the carbons of each lamp until it completes the circuit back to the dynamo. See Fig. 5. This requires

high voltage, each lamp requiring about 50 volts to operate it, therefore an ordinary dynamo with a capacity of 3000 volts will run about 60 lamps.

In this way of wiring, should anything happen to one of the lamps to prevent the current passing through it, there would be no way for the current to go any further, consequently all the lamps

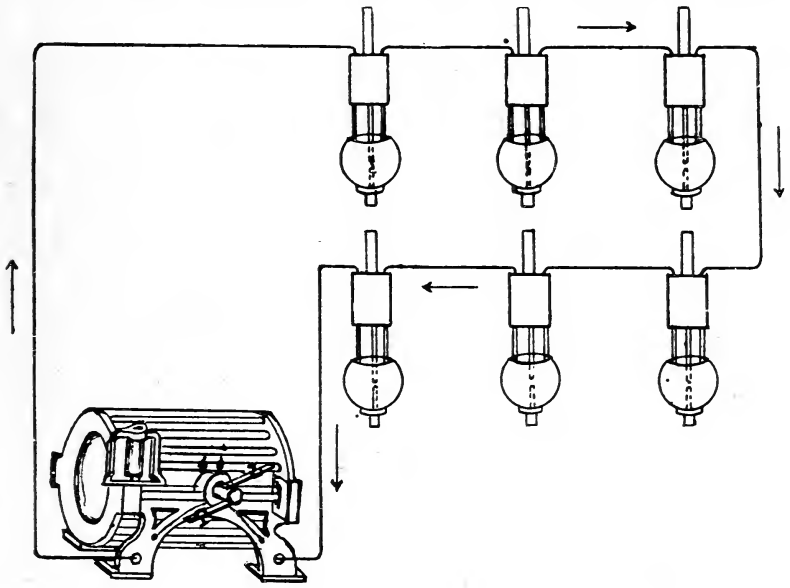

FIGURE 5.

would go out. To avoid this difficulty a shunt is employed around each lamp, which acts only when the lamp will not light.

The Naval Projector is an apparatus consisting of a focusing lens and an arc lamp, mounted in such a manner that a strong light of 6,000 to

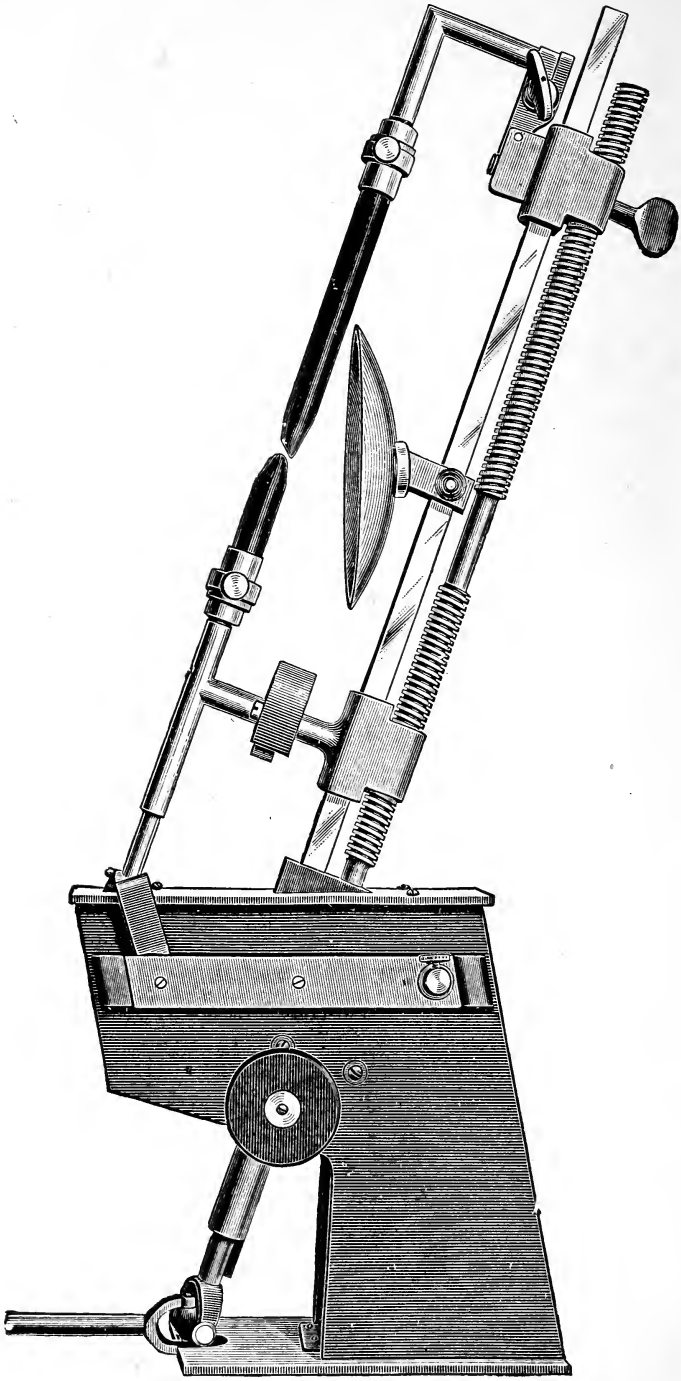

THOMSON-HOUSTON NAVAL PROJECTOR ARC LAMP.

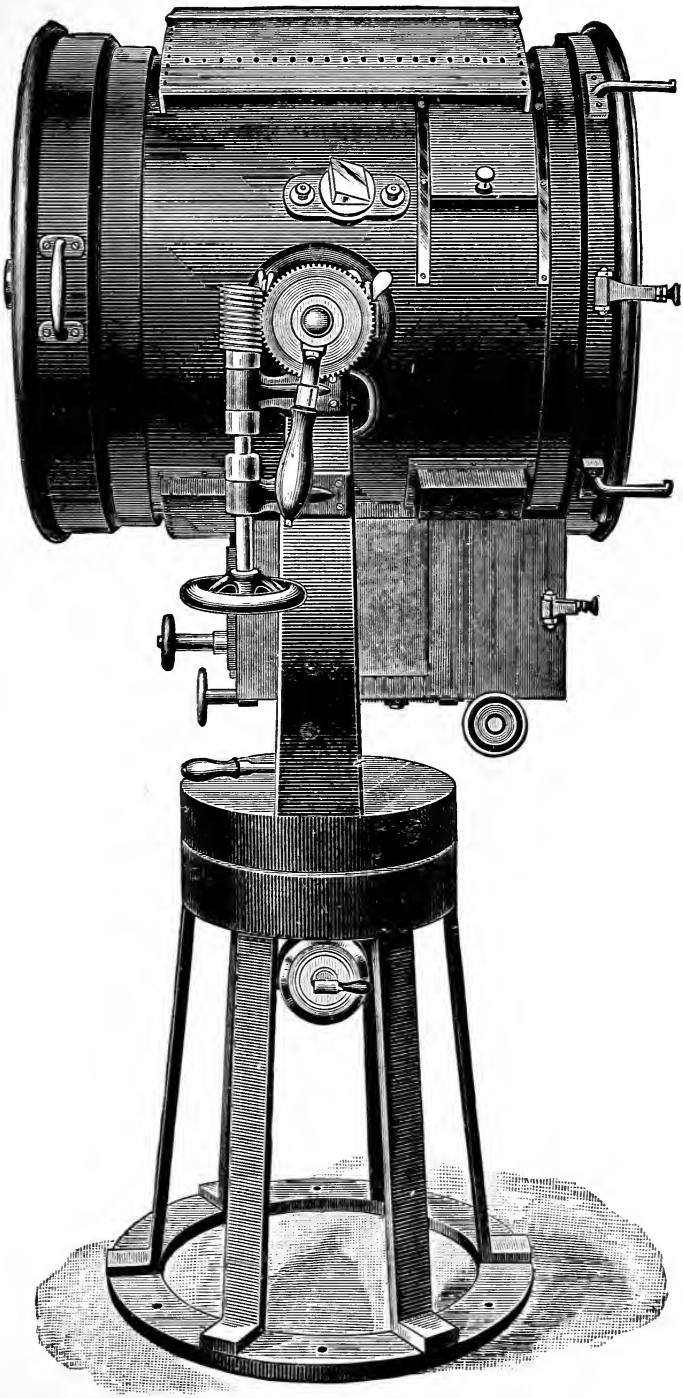

THOMSON-HOUSTON NAVAL PROJECTOR

10,000 candle-power can easily be thrown in any direction at rapid intervals.

On page 115 will be found an illustration of the Thomson-Houston Naval Projector.

They have been adopted by the Bureau of Ordnance of the United States Navy, and have been installed on the cruisers Yorktown, Baltimore, Philadelphia, Charlestown and Newark. Projectors have also been ordered for several additional vessels.

The lamp, see illustration on page 114, is fed by turning the adjusting screw near the base by hand, which brings the carbons to the requisite distance as needed. Search lamps, which are made smaller than the naval projectors, were recently used in the night, during the flood in the Mississippi Valley, in discovering and rescuing the unfortunate people from drowning who were floating about helplessly on rafts, etc.

CHAPTER V.

ELECTRIC MOTORS AND HOW TO BUILD ONE.

Practically an electric motor is a dynamo reversed, it being a machine furnishing power and is actuated by a current of electricity, generally furnished from a dynamo or an electric battery.

The field winding of motors is adapted to the work which the motor is to perform. For constant speed the shunt winding is used. Compound winding is theoretically more correct, but a shunt winding will regulate the machine closely enough for all practical purposes, and is the one most commonly used. Series winding is used where a variable speed is required and where the regulation can be attended to by hand. Its chief advantage is in its great starting power.

Recently the advantages of low speed motors is attracting the attention of electricians. To this class belongs the Perret motors.

The Perret Motor.— The chief distinctive feature of this machine is the lamination of the field magnet. Instead of casting or forging this in several solid pieces, as is usually done, it is built

of thin plates of soft charcoal iron, which are stamped directly to their finished form and clamped together by bolts in such a manner as to secure great mechanical strength.

The advantages of such a construction are, in brief, a magnetic field of great intensity and the entire prevention of all wasteful induced currents in magnets and pole-pieces.

The armature core is also laminated, and the plates have teeth, which form longitudinal channels on its periphery, in which the coils are wound.

The plates in both field and armature are in the same plane, and are of soft charcoal iron, with its grain running in the direction of the line of magnetic force, and there is the least possible break in the continuity of the circuit, there being no air gap between the iron of the field and the iron teeth of armature, except that required for clearance in rotation. Thus we have a magnetic circuit of lowest possible resistance, and it follows from well-known laws that we secure the maximum of effective magnetism with a minimum expenditure of magnetizing power.

The armature coils being practically imbedded in the armature, receive the highest inductive effect from the intensely magnetized iron.

The high efficiency which such construction should give theoretically is practically demonstrated

by the machines in actual work, and ranges from 70% in the smaller to 93% in the larger.

Attempts have been made by many since the days of Pacinotti to use toothed armatures, but with the result that very troublesome and wasteful heating effects were produced in the solid magnets and pole pieces commonly used. With laminated field magnets these disadvantages are avoided, and we are able to secure the advantages enumerated, as well as others, among which may be mentioned the important ones, positive driving of the armature coils and less liability of winding out of balance.

It will be seen that the armature is a ring of comparatively large diameter, with longitudinal channels on its periphery, in which the conductors are wound, and thus embedded in the iron, which is in such close proximity to the iron pole pieces that there is practically no gap in the magnetic circuit.

The field consists of three separate magnets arranged at equal distances around the armature, each magnet having two pole pieces. See Fig. 1. The winding is such as to produce alternate North and South poles. The magnets are built up of plates of soft charcoal iron, which are shaped as shown in the diagram, and the magnet thus produced is of such a form that it may be readily wound in a lathe. A non-magnetic bolt passes

through a hole in each pole piece and the plates are clamped together between washers and nuts on the same. These bolts also serve to attach the magnets to the two iron end frames, which are of ring shape and are bolted to the bed plates of the machine.

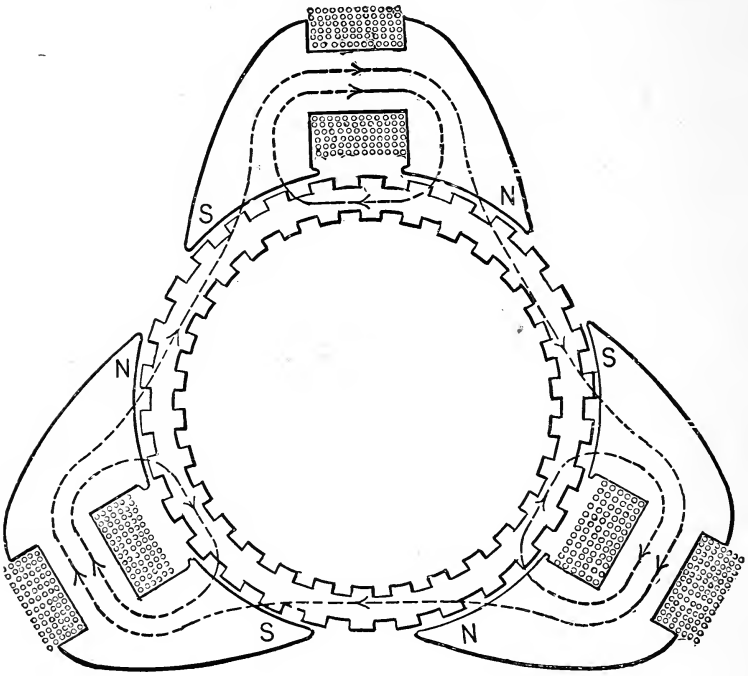

FIGURE 1.

The magnetic circuit is of unusually low resistance by reason of its shape, its shortness, which is shown by the diagram, and the superior quality of iron used.

There is no magnetism whatever in the frame, bed or shaft of the machine, as the magnets are supported at some distance from the frame by means of the non-magnetic bolts, and the armature is mounted on the shaft by spiders of non-magnetic metal.

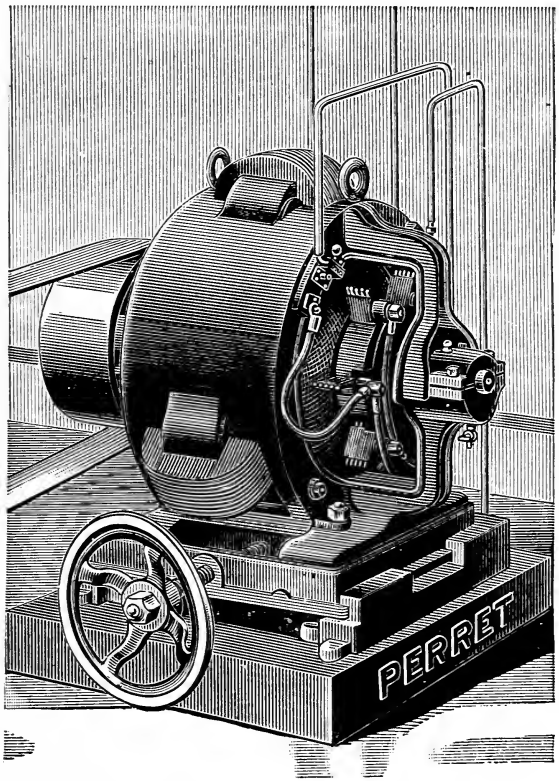

THE PERRET MOTOR.

There is therefore no opportunity for magnetic leakage, and, furthermore, the whole is enclosed by

a shield or case of sheet metal, as shown in the illustration on page 121.

The practical advantages of low speed machines are many. For instance, in ordinary machine shops, wood-work shops, printing offices, etc., the shaft is commonly run 200 to 300 revolutions per minute, and it is a simple matter to belt direct to it from a motor running 500 to 600 revolutions, thus saving the first cost of a counter-shaft and one belt, and saving, also, considerable power which would be lost in transmitting through the counter-shaft and additional belt, which would be used necessarily with a motor of high speed. The advantage is equally as great in case of elevators operated by a belt from the motor, and indeed, it is possible to gear direct from the motor to the elevator.

The United States Electric Motor shown on page 123 is peculiarly adapted for small plants. The armature, as will be seen, is completely enclosed by the field frame and the gauge screen on top; and in addition, the wires constituting the winding are all below the surface of the armature. It is claimed that this latter feature, besides contributing to the safety of the machine, is of great advantage otherwise. The air space is much reduced thereby, producing a machine of high efficiency. To prevent loss and heating in the pole pieces, due to eddy-currents induced by the

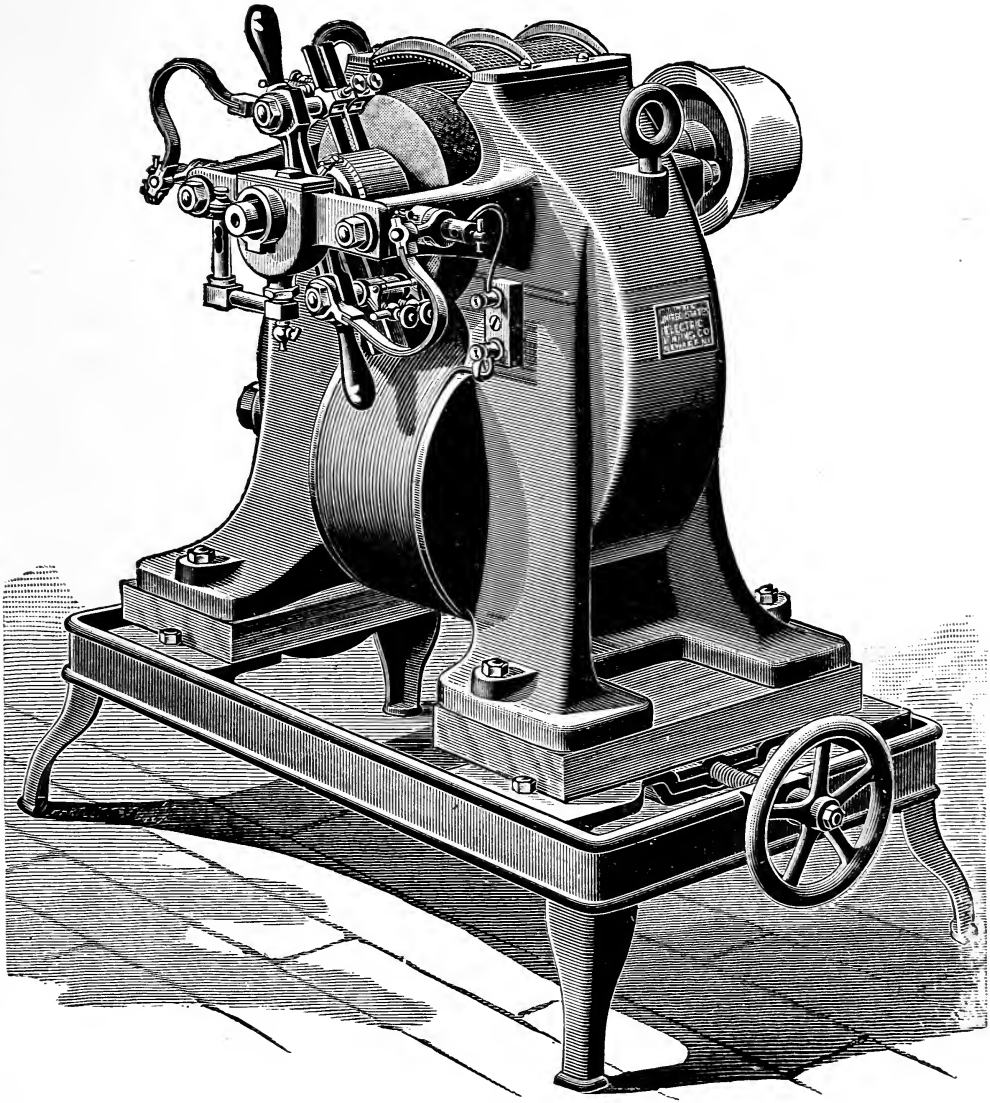

THE UNITED STATES ELECTRIC MOTOR.

rotation of the armature, the faces of the pole pieces are built up of fine laminac, in a similar manner to the armature.

The machines are compound-wound, so as to preserve a constant E. M. F. under varying loads, or to raise the E. M. F. by a given percentage, with increase of load, as may be desired.

The C. & C. Electric Motor is illustrated on page 125. The standard machines are shunt-wound, and resistance of fields and armature is so carefully proportioned that the speed is practically constant under the greatest variations of load.

The magnetic circuit is of the consequent pole type, which gives the compactness of design. It is made in the circular form, having divided or parallel circuits meeting at top and bottom and passing together through the armature core. It consists of two cores, shaped like segments, of a circle bolted to pole pieces at both ends, surrounding the armature. The cores are of wrought-iron, planed off at the ends to an angle of ninety degrees, so that when the machine is put together each core and pole piece forms a quadrant of a circle, the centre of which coincides with the centre of the armature shaft, which is the only shape that makes it possible to attain a high magnetic efficiency. This construction gives a very short magnetic circuit, free from corners or projections where leakage may occur, and makes the motor

exceedingly compact for a given power. The pole pieces are of cast-iron, of much greater cross section than the cores, the lower one being cast in one piece with the base. They are bored out by special machinery of great accuracy, and the surfaces to which the cores are bolted are planed with exactness. The bolts passing through the poles are of ample dimensions, having their heads sunk into the casting, so as not to make any projection from the smooth surface of the pole pieces. The

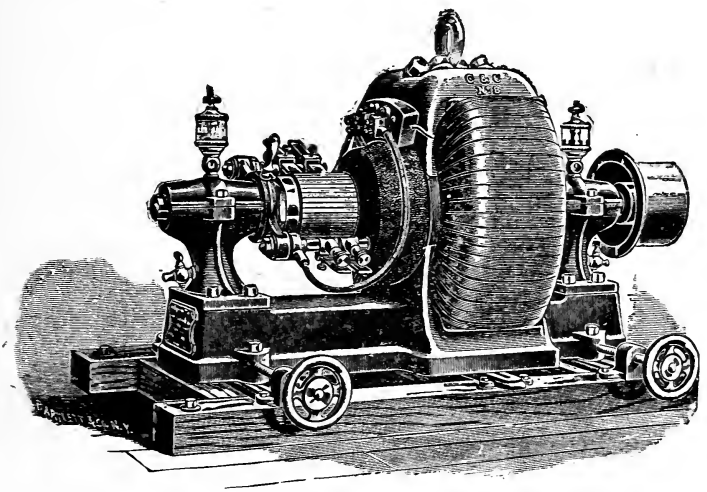

THE C. & C. MOTOR.

cross sectional area of pole pieces and armature core is always much greater than that of the field cores, and the clearance allowed between armature and poles is reduced to the lowest amount consis-

tent with safety, being never more than 3-64ths of an inch. The poles enclose about 280 degrees of the armature circumference.

The field magnet coils are wound directly on the cores by hand, and the greatest care is exercised in winding. By this method the coils are brought very close to the core, and the wire is under continual inspection during the winding. Cotton covered wire of the best insulation is used, and an extra covering of oil paper is added wherever it is considered advisable. The coils, after being shellaced and dried in an oven, are measured to standard resistance and insulation before they are passed from the winding room. When finished they are covered with canvas and rubber tape painted with black varnish, which ensures perfect protection to the wire.

The armature is built upon a steel shaft and the shaft is turned down and is of considerably greater diameter at its centre than at the ends running in the bearings. The armature core is a drum, made up of thin discs of sheet-iron, insulated carefully from each other. These are stamped with a hole in the centre for the shaft, and after placing them on the shaft they are compressed together with great force. Iron arbor plates, keyed to the shaft at the ends, hold the discs firmly in position, and are themselves held by nuts screwed on the shaft. These discs are in addition held together by long

bolts, whose heads are sunk into the arbor plates, thus ensuring an absolutely rigid and solid core. The finished core is turned smooth in a lathe and is then ready for winding. In winding, the core is first thoroughly insulated with mica and oil paper. A modification of the Siemens winding is employed and the wire is proportioned to carry an excess of current above the full load of the motor, without undue heating. In all cases where wires cross in winding the insulation is fortified with silk and oil paper. The motor is so designed as to allow the use of the wire on the armatures of much larger size than the rated capacity of the motors actually require, thus making it practically impossible for the armatures to burn out. They are bound by narrow bands of German silver wire placed together and wound on mica strips. Canvas, painted with asphalt varnish, covers the armature heads and is secured to a fibre washer, fitting tightly over the shaft at one end, and to a groove in the commutator at the other.

The armatures are dried and tested for insulation before the canvas covers are put on. Double insulated wire is used on all armatures, and after completion, all armatures are balanced with the greatest care to insure noiseless running.

The commutator is built up of cast tempered or of hard drawn copper bars of tapering cross section beveled at each end. The insulation between the

bars is of mica, made up of thin strips. They are held together by steel collars, turned on one side to the same angle as the ends of the bars and carried on a brass sleeve fitting on the shaft. The sleeve is threaded at both ends to receive nuts, which are screwed up against the collars, thus holding the bars firmly in place without allowing them to twist out of line. The sleeve and collars are carefully insulated from the bars by thick layers of mica.

The base is of cast-iron, very rigid, of which the lower pole piece forms a part. Its length is considerably greater than its width. All the surfaces to which the field cores and pedestals are bolted are planed true and finished to a smooth polished surface, so as to prevent the slightest loss of magnetism from poor joints. The motor rests upon iron rails fastened to a wooden base frame, which allows of the adjusting of the machine to take up any slack in the belt.

The pedestals are of cast-brass and are very short, heavy and of great strength. Brass is used to prevent any tendency to magnetic leakage. They are bolted to planed surfaces at the ends of the beds by four bolts, and are guided to their exact positions by two dowel pins. They are also provided with an oil well and pet cock for carrying off the oil drip.

The bearings of all motors are of a brass alloy, particularly well adapted to this purpose, and are in the form of a sleeve, having a convex bearing surface at the centre, which rests on a concave surface on the pedestal. The bearings are thus self-aligning, which prevents any danger of binding. The inside of the bearing is grooved to retain the oil and carry it over the shaft. The bearings are provided with sight feed oil cups, or are made self-oiling in some sizes of machines when preferred.

The rocker arm is of cast-iron, supported on a projection of the pedestal. In the centre a hole is drilled and tapped, into which a handle for turning the arm is secured. This handle passes through the arm, and when screwed up, its head is buried in the standard so as to hold the rocker arm firmly in any desired position. To shift the brushes it is only necessary to unscrew the handle which loosens the rocker arm, when it can readily be turned in the desired direction.

The brush holders are made of brass, supported on brass rods, secured to the rocker arm by nuts, which are insulated with hard rubber washers and bushings. Any desired tension of the brushes can be obtained by adjusting the thumb screws in the ends of the brush holders. When it is desired to raise entirely the brushes from the commutator, the holder is simply pushed back until its spring

catches in the slot cut for the purpose. The brushes rest between thick metal strips, which keep the thin copper strips of which they are made up from spreading and yet allow them soft pressure on the commutator.

The brush pins are made so that the direction of rotation of motors or dynamos can be readily changed by simply reversing the field connections and turning the brush-holders around on the pins so that the brushes will have the opposite slant to the commutator surface.

An improved form of carbon brush has been designed to use with these machines, which in many cases has been found preferable to the copper brush, and the rocker arm is designed so that either kind of brush holder and brushes can be used.

The Crocker-Wheeler Electric Motor, of which two illustrations are given, on pages 131-132, possess some special features of merit which are as follows:

The field magnets are composed entirely of the best wrought-iron, each magnet being forged in a single piece, and set deeply into the base in order to secure solidity and ample magnetic contact. The space for wire on these magnets is perfectly cylindrical, in the form of an ordinary spool, thereby insuring smooth and perfect winding of the

wire, and is short in length, permitting the shaft of the machine to be low enough to free it from vibration. By this construction the neutrality or freedom of the base from magnetism is secured, and there is no tendency to leakage. This is

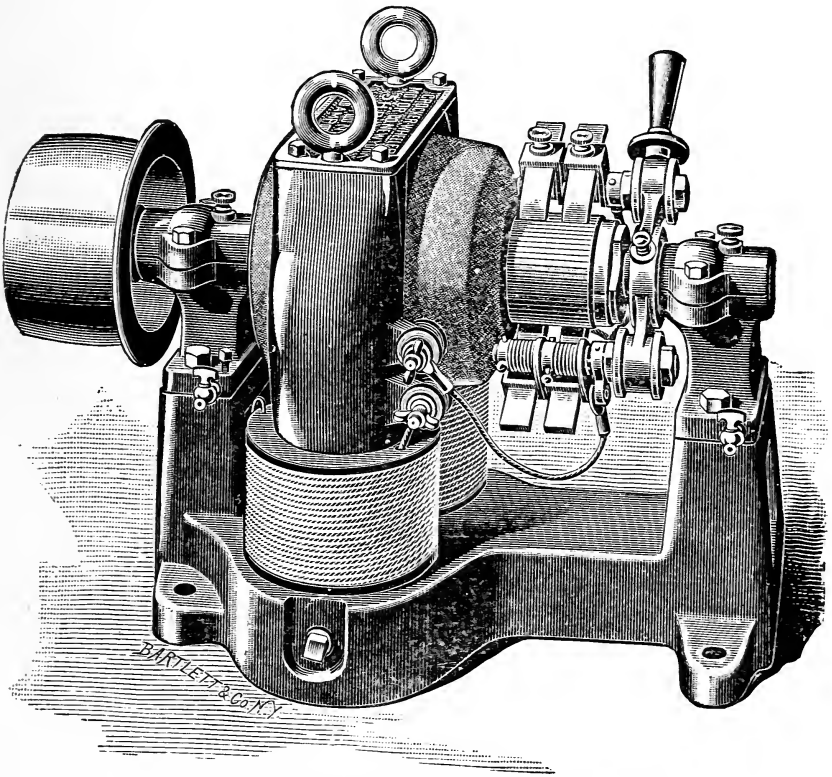

THE CROCKER-WHEELER ELECTRIC MOTOR.

claimed to make the machine much superior to those in which the base is made to serve as one of the pole pieces, as the bearings then become magnetized and make the shaft bind.

The armatures contain several improvements. They are sufficiently large in diameter to obtain slow speed, and are so designed that the wire winding is entirely embedded below the surface of the iron core, thus protecting it from all injury,

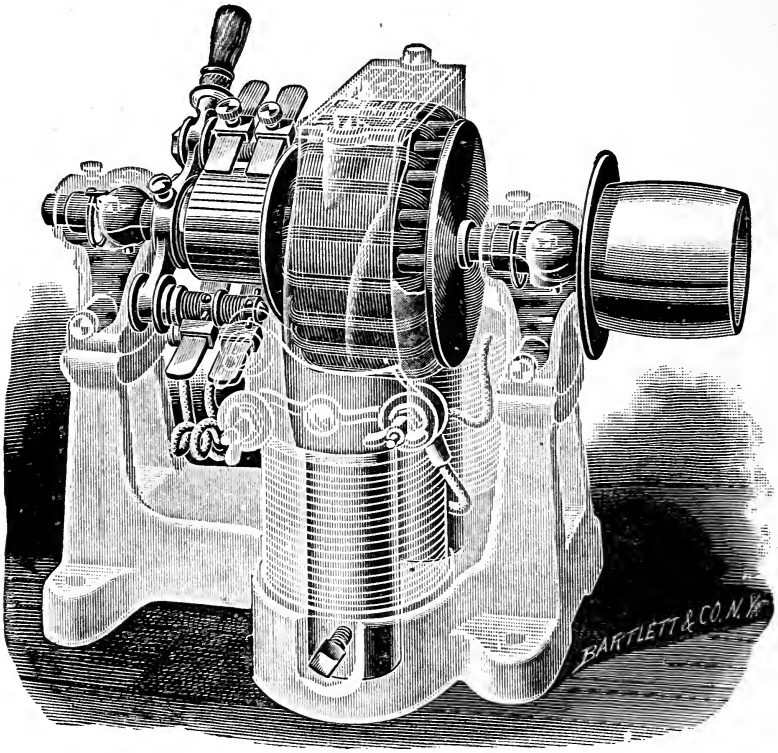

SKELETON VIEW, SHOWING INTERNAL CONSTRUCTION OF CROCKER-WHEELER ELECTRIC MOTOR.

holding it rigidly in position, and rendering it possible for the magnets to approach very closely to the core, so that an intense magnetic effect is

produced. The armature is mounted upon a brass face-plate, which is first turned perfectly true, and after completion the armature is very carefully balanced, so that when run at full speed the motion is hardly perceptible.

The bearings are all of the self-oiling type, which do not require attention oftener than once in two to four weeks.

The base of the pillow-block is hollow, and contains a supply of oil, which is carried over the shaft by two rings which travel upon the latter, and are caused to revolve by its motion. They dip in the oil and carry it continuously to the upper side of the shaft.

The bushings in which the shaft runs, rest in turn in universal or ball joints in seats of babbit metal in the pillow-blocks, so that the bearings are sure to assume perfect alignment when the shaft is introduced. After the motor has run a month, the old oil containing the grit, etc., should be drawn off from the pet cock at the base of the pillow block. This cock should then be closed and fresh oil introduced by removing the thumb screw in the pillow block cap on top.

The brushes are held by rocker arms which can revolve freely around the entire circle, without fear of the brass connecting parts "grounding" against the frame, a great advantage in special work where

motors are to be adapted for use in unusual positions.

With this form of armature core which reaches close to the field magnets, and the high grade of wrought-iron used for the latter, it is claimed they are enabled to maintain the magnetism and therefore the power of these motors, with only about one-third as much wire as is used on the fields of ordinary standard machines. This great saving of wire not only reduces the weight of the machine, but materially increases its efficiency, or the amount of power that can be obtained from a given amount of electricity, for with less wire less electricity is required.

The speed of motors is very low, which in many cases makes counter-shafting, etc., unnecessary. The proximity of the armature core to the field magnets renders a high magnetic pressure unnecessary, therefore the magnetism escaping from the fields is very much reduced.

Double insulated wire is used throughout for the windings, the cores being first wrapped with oiled paper and heavy canvas saturated with shellac.

The rocker arm is provided with a heavy insulated handle to enable all adjustments to be made without touching the conducting parts, and the entire machine is heavily japanned and baked at a high temperature, thus securing a polished surface which resists dirt and oil.

In connection with their incandescent motors, they furnish fire-proof and indestructible regulating boxes or rheostats for starting, stopping and varying the speed of the machines. These are built entirely of slate, china and iron. The arrangement of contacts in the switch on top of the regulator is such that both the field and armature of the motor are charged by the single operation of turning the knob, making it impossible to put the current on the armature before the field is charged, which has so often been the cause of the accidental burning out of many motors by the use of ordinary regulators.

The field is first charged through a small resistance coil which is put in for the purpose of preventing a too sudden change in the magnetic strength of the latter, as well as to divide the spark when the motor is disconnected. The coils used for starting the armature are all of the same size wire, carefully tried for carrying the full current of the machine at all speeds. With the fire-proof regulator, the motor can therefore be slowed down and left running at any desired speed, indefinitely, and the usual caution "never to leave the box half turned on for fear of overheating and fire" is unnecessary.

The Thomson-Houston Stationary Motor.—The 15 horse-power motor shown in the illustration on next page has an average commercial efficiency

when fully loaded of 91 per cent. This high efficiency is obtained by paying careful attention to the electric and magnetic proportioning of the motor. The magnetic circuit is very short and of ample section, and therefore of low resistance, and

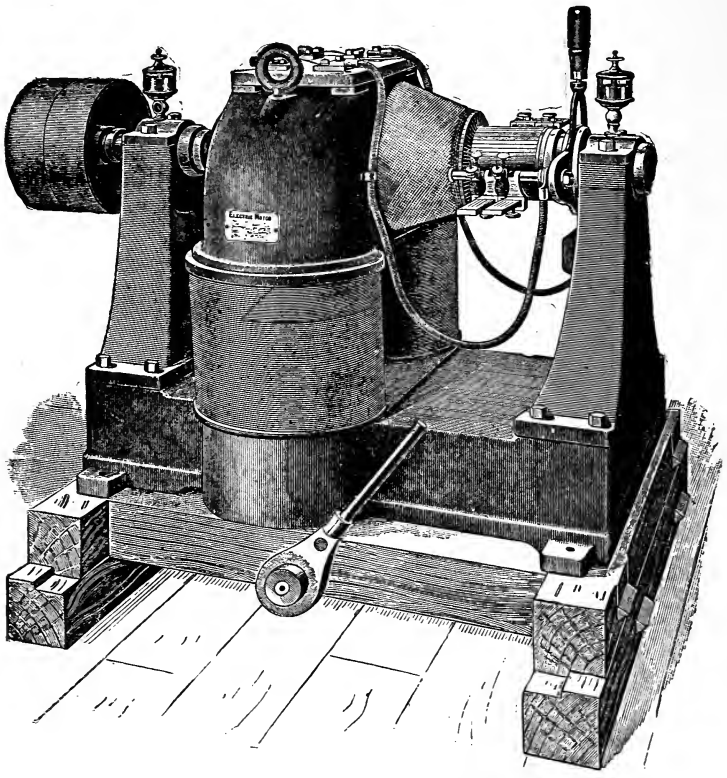

THOMSON-HOUSTON STATIONARY MOTOR.

the magnetic poles are so formed as to convey the magnetism into the armature with the least possible loss. As will be noted in the engraving,

the poles of the field-magnets, the bodies or cores of which are round in section, project upward, enclosing the armature. The armature is nearly square in longitudinal section and relatively large in diameter. This gives a high peripheral velocity and a rapid cutting of the lines of force. In consequence of this construction, also, the armature is capable of exerting a powerful rotative force. The armature being short, avoids the use of a long and consequently less rigid shaft. The coils of the motor-magnet are wound on bobbins which are slipped over the cores; it is therefore easy to change a coil or to replace it for any purpose whatever. The field is wound in shunt to the armature, and is relatively of very high resistance. This reduces the amount of electrical energy required to energize the field-magnet to a very small fraction of the total electrical energy absorbed by the motor. The armature core is thoroughly well built and is a very solid and substantial structure. At the same time the perfect lamination of the core reduces the loss by Foucault currents to a small amount.

The winding on the armature, which is a modification of the well-known Siemens' type, is of very low resistance.

The copper wire on the armature is held in place by means of bands, which are made of such strength that it is impossible for them to yield

Fig 1

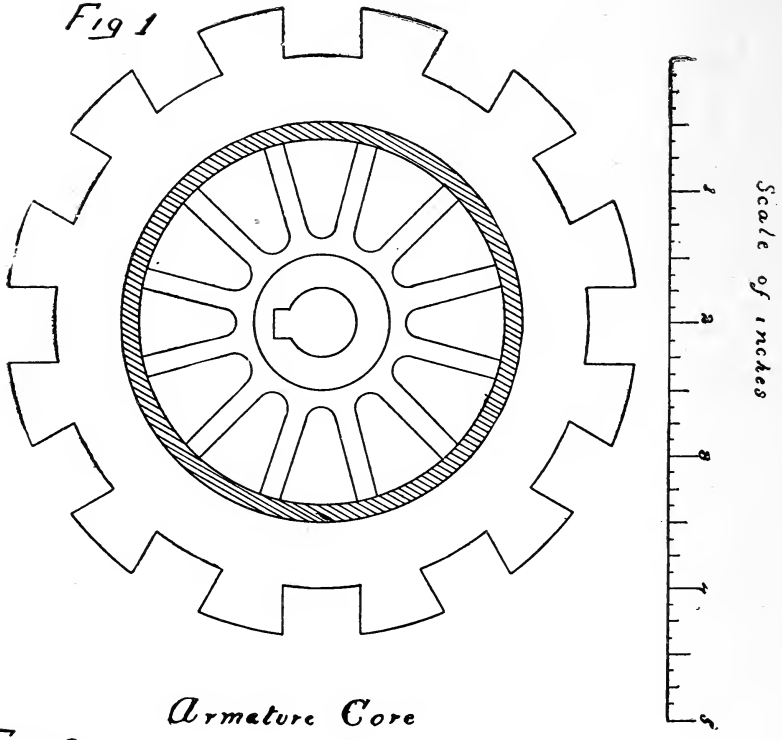

Armature Core

Fig. 2

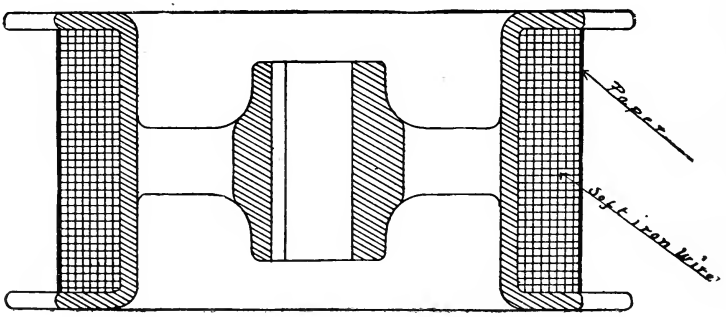

from the centrifugal force, even when the motors are run at abnormal speed.

Should the reader wish to build a small one-half horse power motor he may produce a very good machine by carrying out the following directions:

In designing this motor the aim has been to produce a machine embodying a large percentage of efficiency, with a reduced percentage of skill and labor, and at the same time have a machine that will present a neat appearance, as will be seen from the general view of the motor. It is mounted upon a pedestal, preferably cast of some cheap alloy, such as gun metal which will answer the purpose admirably, whereby it can be set up on the floor, the wall or ceiling, or, in fact, any place that presents surface enough to fasten it to. The armature, Fig. 1, is of the Gramme ring type, having a winding of No. 13 double cotton-covered wire, 6 turns and 5 layers in each section, making a total of 360 turns of wire on the armature. The connections are shown in Fig. 1. The spider is a casting which must be of brass or gun metal, while Fig. 2 shows a section of the spider with the soft iron wire wound on, which forms the core. After winding the wire on, it must be covered with paper and thoroughly shellaced, then proceed to wind on the coils as shown in diagram, Fig. 3. Figs. 4 and 5 are views of the field-pieces, which are of cast-iron and have been designed with a

view to utilizing an amount of the dead wire on the sides of the armature, the sides have purposely been left heavier than the ends of the polar space, so that if any irregularities in the winding of the armature present themselves there will be stock enough to bore out to accommodate it. It is advisable, however, to build the armature first and then uniformity of the field piece can be obtained, as the armature will determine the width it is to be bored to and due allowance made in the pattern. Figs. 6 and 7 show the bearings, which are of gun metal, and being grooved as shown in Fig. 7, to accommodate the brush-holder, which is, of course, on the commutator end. Figs. 8 and 9 show the commutator and method of construction. To make the segments procure a casting of copper, bore it to fit the sleeve, which is made of hard fibre, put it on an arbor and turn it off to the size desired, and then cut out short grooves in each segment. Before cutting the segments, in performing this operation, do not cut clear through while on the arbor, but finish with a hack saw. The insulation can be procured by turning a fac-simile of the segment casting out of hard rubber and sawing into strips, which gives an exact reproduction of the segments. Fig. 10 shows the studs for the bearing on the commutator end, which is of machine steel, the same as armature shaft, Fig. 11. Fig. 12 is the core for the field magnets, made of soft Norway iron. Fig. 13

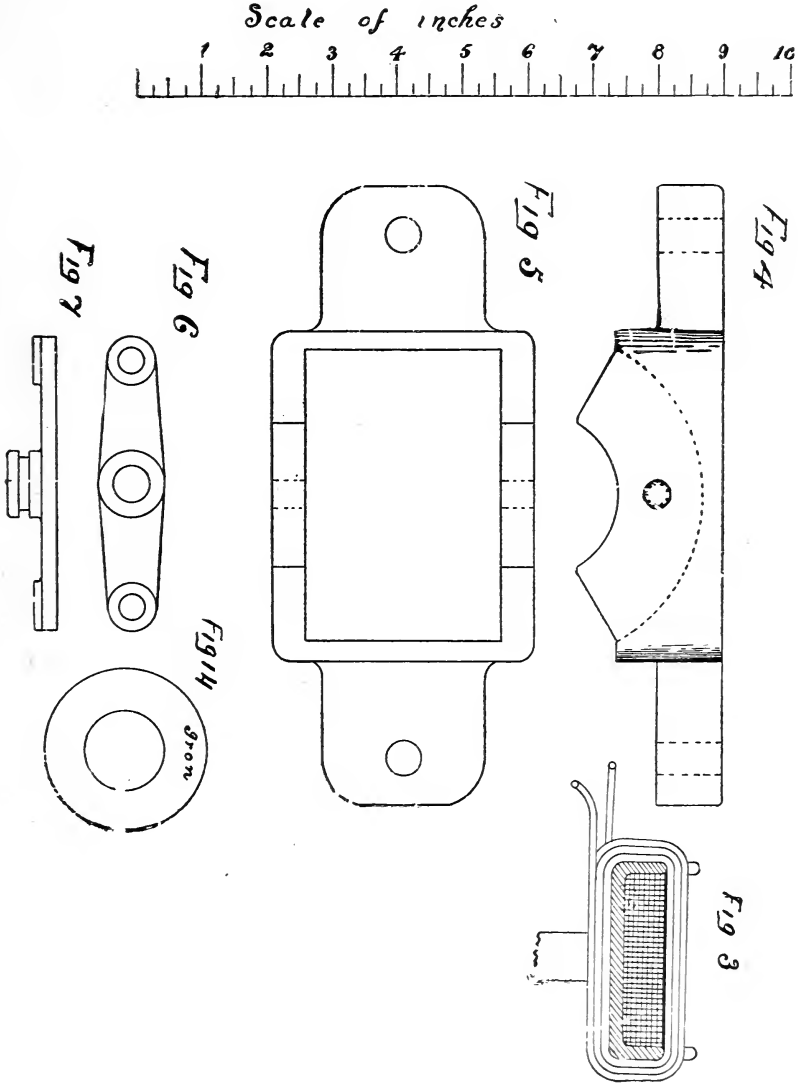
Scale of inches
1 2 3 4 5 6 7 8 9 10
Fig 7
Fig 6
Fig 5
Fig 4
Fig 3
Fig 1
iron

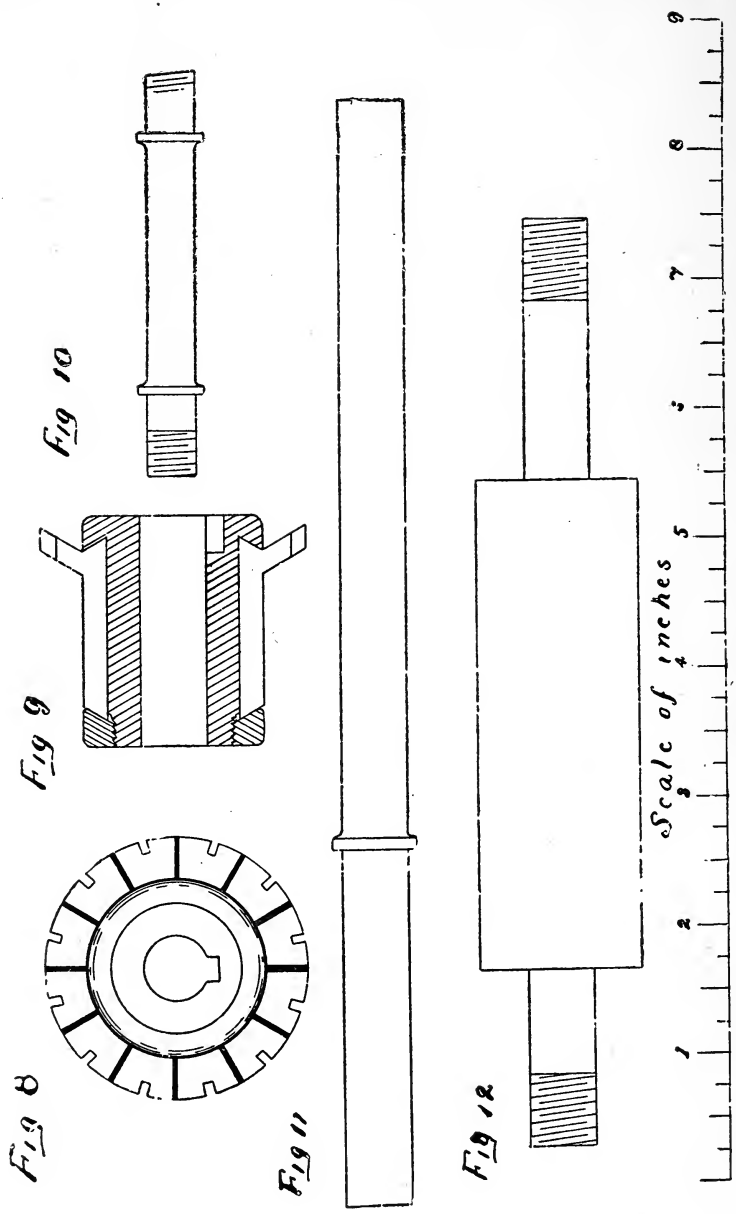
Fig 8
Fig 9
Fig 10
Fig 11
Fig 12
Scale of inches
1
2
3
4
5
6
7
8
9

is the stud for the bearing on the pulley end of machine. Fig. 14 is the washer (made of fibre) for the ends of the magnet-cores, being driven on and the edge of the metal riveted down over them

Fig. 13
Side view of motor

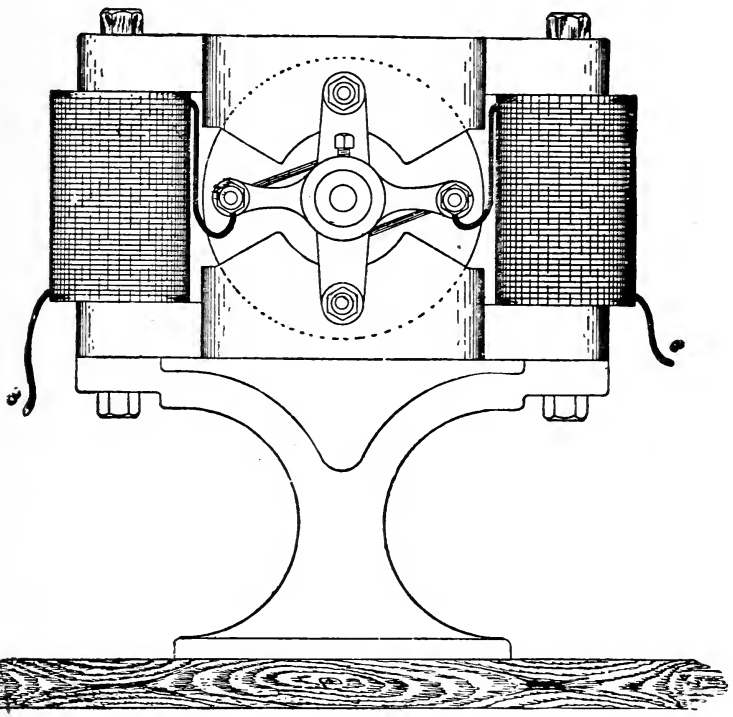

to prevent the wire forcing them off. The winding for the field magnets consists of No. 12 double cotton covered wire, 36 turns and 6 layers, making 432 turns on both magnets. This machine is cal-

culated to develop one-half horse-power at 1500 revolutions. The connections will be readily understood from an inspection of Figs. 13 and 15,

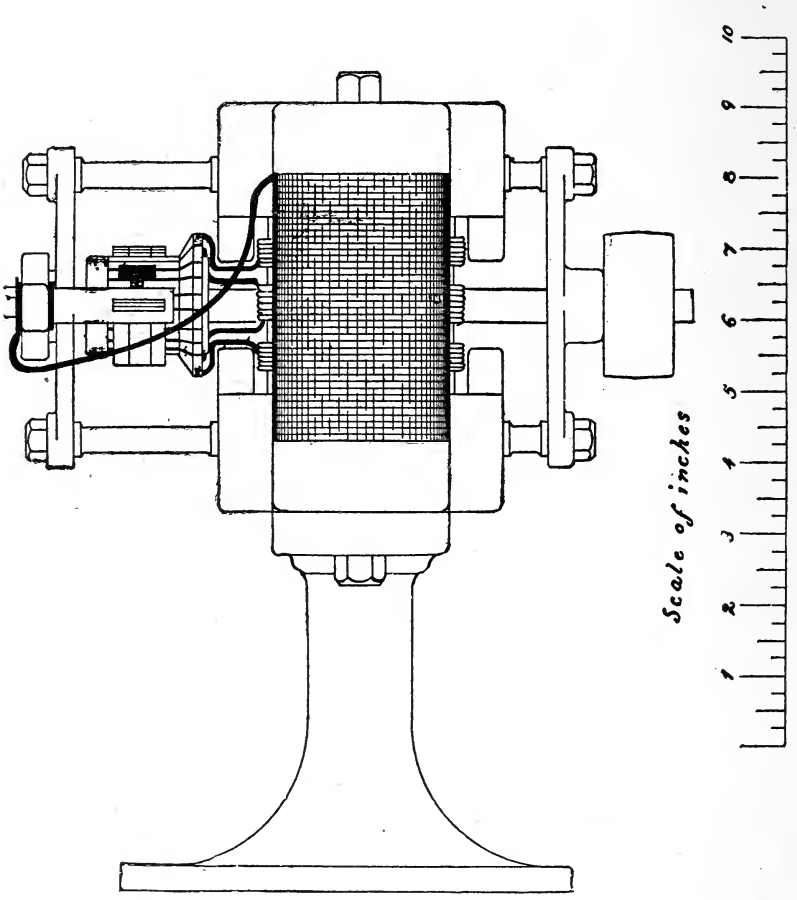

FIGURE 15—END VIEW OF MOTOR.

which show all connections very clearly, a number of the commutator connections being left off on one side to avoid confusion and to show clearly the

method of connecting. The brush holders can be scaled off from these two drawings which is so simple as not to need any further detail. On top of the motor there is ample room to mount a switch board, having two binding posts by which the terminals a-a (Fig. 13) may be connected to the battery.

CHAPTER VI.

FIELD MAGNETS.

The theory of a dynamo requires a coil of wire rotating between the ends or "poles" of a magnet.

In most dynamos there is only one magnet, but special forms are made, in which several magnetic "fields" or regions are available. Electro-magnets, more powerful and compact than permanent forms, are almost exclusively adopted. For purposes of regulation it is sometimes desirable to vary the intensity of these magnets, and electro-magnets can be made of any strength by varying the quantity of current flowing through the encircling wires.

The ends of "field magnets" are usually made to embrace a large portion of the revolving armature. A permanent magnet can be fitted with extensions, as shown in Fig. 1. These ends are called pole-pieces, as they become the poles of the magnet. Five separate pieces are usually joined to form an electro-magnet. See Fig. 2. The two pole pieces are of cast-iron, the two cylindrical "cores" of wrought-iron, as is also the "magnet

Fig 1

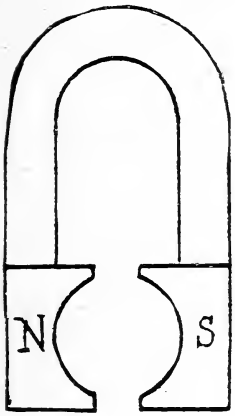

Fig 2

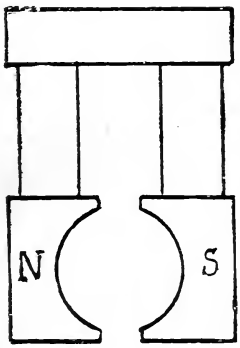

Fig. 3.

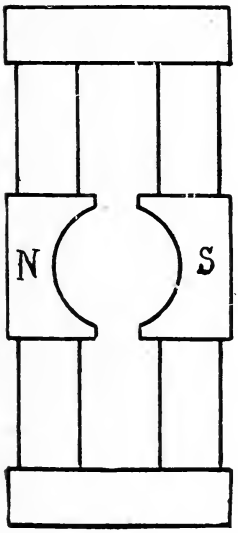

Fig 4

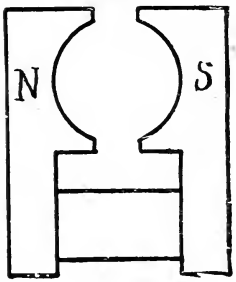

yoke," which connects the cores together. The surfaces where these separate pieces touch are made very smooth and flat, in order that the magnetic circuit may be as if in only one piece of metal. This form is convenient for handling and allows easy application of the coils of wire. It is not best to wind this directly on the iron, but to have it on detachable bobbins. Simple brass rings connected with a sheet-iron or tin cylinder is strong enough and the spools fit loosely over the cores.

Such arrangements as Figs. 1 and 2 furnish magnets with "salient" poles, that is, virtual poles at the very ends of the cores. If another set of cores be added to the other side of the pole pieces (Fig. 3) a field of twice the strength can be obtained. In this case the poles are "consequent," for the magnetism is available in pole pieces, which are interruptions in the otherwise continuous iron.

Sometimes only one coil of wire is used, and consequently but one core is necessary. Fig. 4 shows one position, and Fig. 5 the same with the core perpendicular. When this form is doubled it becomes Fig. 6. By lengthening the pole pieces into cores this form becomes merged into Figs. 7 and 8.

Just which form of these field magnets is best to use depends on the purpose for which the dynamo

Fig 5

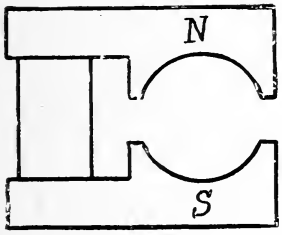

Fig 6

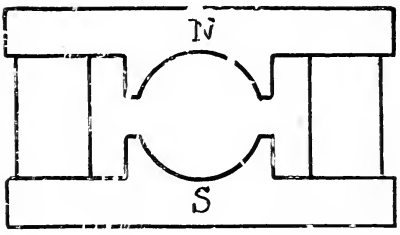

Fig 7

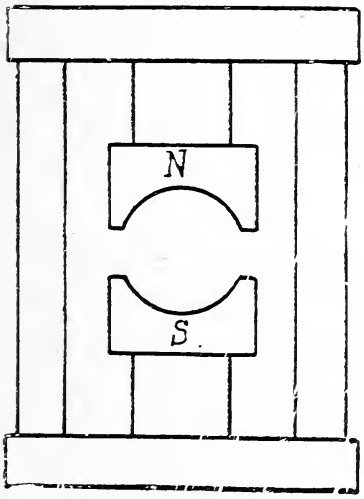

Fig 8

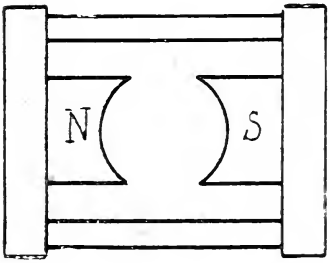

or motor is designed. Sometimes, for the same purpose, different forms work equally well. Usually dynamos for continuous currents have but two poles, as shown in these figures. By increasing the number of poles the armature will receive the desired number of inductions at a slower speed of rotation. An alternating current machine should have a large number of poles in order to give a rapid alternation. Two hundred and fifty reversals per second is commonly attained.

Fig. 9 shows a four-pole magnet. The cores are also used as pole pieces. Fig. 10 shows a six-pole magnets. This can be used for continuous currents but is better adapted for alternating. It is not unusual for an alternator to have 16 or 20 poles. For future machines the promise is for even a larger number. The more poles the slower the speed can be, and the tendency now is toward slow running machines.

For arc dynamos the mass of iron in the magnets should be comparatively small, but a large amount of copper wire needs to be used on the spools. Arc dynamos are series-wound, that is, the entire current from the armatures circulates around the field cores; the field is in "series" with the rest of the circuit. When this winding is used the field magnet experiences every fluctuation of the current that lights the lamps, and this varying magnetism is utilized in adjusting the regulator.

An arc dynamo preserves a current of uniform strength, but the potential or voltage varies according to the number of lamps supplied.

A dynamo for incandescent lighting or for supply of power should have a constant voltage, but strength or quantity dependent on the demand. For such a machine there should be a very massive field magnet. The winding should be in "shunt,"

Fig. 9.

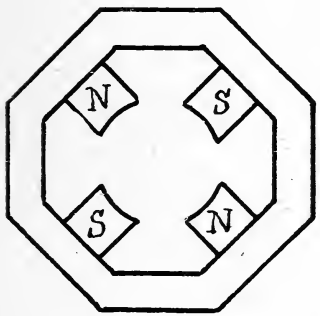

Fig. 10.

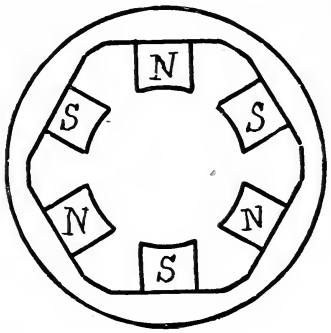

that is, the field spools should be in a circuit, independent of the working circuit. This subtracts so much from the useful output of the machine, but the wire is fine and long and is of sufficient resistance to allow only about one one-hundredth of the whole current to pass. The magnetism thus kept nearly constant, the potential is uniform.

Absolutely constant potential can be obtained by "compound" winding; that is, by putting both series and shunt coils on the magnet cores. Such winding is in common use on dynamos, for almost all work except arc lighting.

To get just the amount of wire on a field magnet is not easy without elaborate data. Manufacturers usually wind a temporary coil on each bobbin for experimental purposes. The armature is driven at its calculated speed and current from another source sent through the temporary field wire. From measurements of the number of turns of wire and the current necessary to bring the machine to its proper output, the final winding can be calculated. It is desirable to use as large wire as possible in order that the heating effects be low. About 1000 amperes to the square inch of cross section of wire is a safe allowance. For arc dynamos the wire needs to carry about 10 amperes. From one to three amperes is in the field circuit of a shunt dynamo. In compound machines the shunt is the same as in the previous case, but the series coil needs to be sufficiently large to carry perhaps several hundred amperes.

A dynamo should be designed in such a manner as to economize material. The iron of the magnet should also be compelled to form the frame for the machine, and give places for the armature bearings. No part of the magnetic circuit should have less

cross section of iron than the cores. This rule has not always been observed, and a large amount of external magnetism, or leakage, has been the result. A perfect dynamo would exhibit no outside magnetism, all being used within for useful work.

The size of field magnets is dependent on the armature. The capacity of a dynamo lies in its armature, and for that the first calculation is made. Afterwards suitable fields are designed. An early error in dynamos was to use very long cores; at present they are very short and the magnetic yoke massive. The diameter of the cores for most purposes should be two-thirds or four-fifths of the armature diameter, and length about equal to the diameter of armature.

An important consideration in the design of magnets is to keep in mind accessibility to the armature. It is not advisable to remove or replace an armature endwise, but the field magnets, in part or whole, should be easily removed and leave the armature open for inspection or removal.

In the next chapter, which discusses armatures, general dimensions will be given, and suitable forms of field magnets suggested which correspond with present electrical practice.

CHAPTER VII.

ARMATURES.

THE sight of a keeper across the "poles" of a horse-shoe magnet is familiar to every one. Such a piece is also called an "armature." Every dynamo has an armature, yet the form of it is such as to conceal its identity. Its purpose is the same—to convey the magnetism from one pole piece to the other. Instead of being flat or cubical, armatures are cylindrical, and have imbedded in them, or laid upon their surface, copper wires for conducting the currents of electricity that are generated when the armature revolves.

By means of commutators, to which the wires are connected, the currents are collected by brushes and carried away to light lamps or for any other purpose.

The iron centre upon which the wire is wound is called the core.

One of the earliest armatures is the Siemens' or shuttle form. A cylinder of wrought or annealed cast-iron is grooved on both sides and the recesses filled with wire wound back and forth.

To each end is screwed a brass head, in which short shafts are fitted. These shafts, besides supporting the armature in position, carry the driving pulley and the commutator.

The commutator has but two parts, to which, after being carried through a hole in the shaft, the two ends of the coil are attached. Fig. 1 shows side view of this construction, Fig. 2 a transverse section with wire enlarged, and Fig. 3 the commutator.

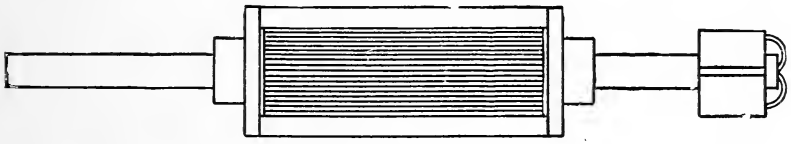

FIGURE 1.

This form of armature is very energetic and is well adapted to small dynamos for intermittent work. For experimental purposes a large current is available for short periods. When run continuously this form heats greatly on account of the large mass of iron in the armature.

The rapid magnetizations and demagnetizations generate wasteful heat currents. By building the core of sheet iron, separated by tissue paper, the heating can be reduced. Each sheet is made the shape of Fig. 2, and strung along on a shaft that extends entirely through, in one piece, from pulley to commutator. In this the core is subdivided

into such a large number of small masses that the eddying heat currents are considerably obviated. A core one and one-half inches in diameter and four inches long, made in this way and wound with No. 18 wire, will furnish a current of about 25 volts and 4 amperes. For such an armature fields of form in Fig. 2 or 3 of last chapter, but with cores of flattened sections instead of circular will be suitable.

Fig. 2

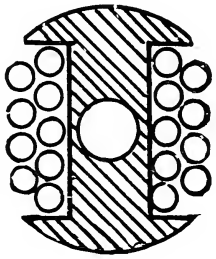

Fig. 3

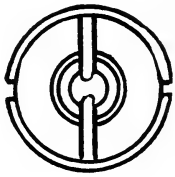

As there is but one coil of wire on this core, there will be but two inductions of electricity for every revolution. This would give seven pulsations instead of a smooth flow of current. Instead of two large grooves for the wire, a larger number of small grooves can be cut in the core, and each have its own coil of wire. Such an armature is used in many makes of dynamos. It has the value of keeping an excellent magnetic path from one pole piece to the other. The wires are securely

held in place and well protected from damage. See Fig. 4.

Any armature which has projections of the core between the coils, heats itself and the pole pieces.

Fig. 4

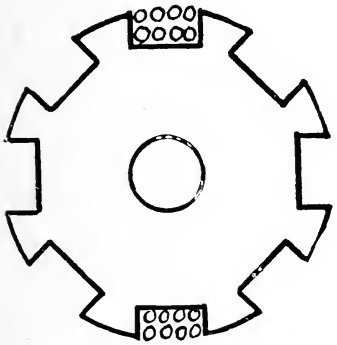

Fig. 5

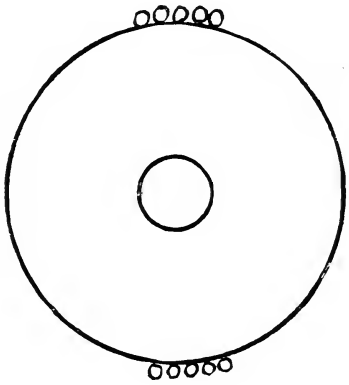

Most manufacturers make the core perfectly smooth and wind the wire over the entire surface. See Fig. 5. The sheets of the core are strung on a shaft, tightened between two wrought-iron "heads" screwed on the shaft. These heads are slotted to receive wooden or leatheroid pegs, which keep the wires in place. With such armatures very many different coils of wire can be put on and supply a current of almost absolute continuity.

A core four and three-eighths inches in diameter, six inches long, wound in thirty-two sections with No. 15 wire, would supply a current of 80 volts and 15 amperes.

This is a conventional form of armature, and almost any style of field except the "multi-polar" is suitable, if the right proportions are observed. Twenty pounds in all of No. 23 wire would be required for the field spools. Two horse-power would drive such an armature. By increasing these dimensions in proportion any size desired can be reached. One of twice these dimensions would furnish eight times the capacity. Four times the dimensions would give sixty-four times the capacity.

In such armatures the coils are not kept entirely separate from each other, but coil after coil is put in place so that the end of one coil and the beginning of the next is united and, besides, furnishes a connecting wire for a segment in the commutator. The winding can be with one continuous wire, with branches at equi-distant points for the commutator segments.

The last form has been called the cylinder or drum armature. In 1860 Pacinnotti invented a ring armature. The winding was between projections on the outside of the core, but was threaded in and out through the inside. See Figs. 6 and 7.

At first a solid piece of iron was used to form the core, but, as in other cases, sheet iron is now exclusively used.

A good proportion for cylinder armatures is for the diameter to be two-thirds the length. In the ring form the diameter should be about twice the length.

Gramme, in 1870, modified the armature by leaving off the projections and winding wire over the entire outside surface, as has been done in the case of the drum form.

Fig. 6.

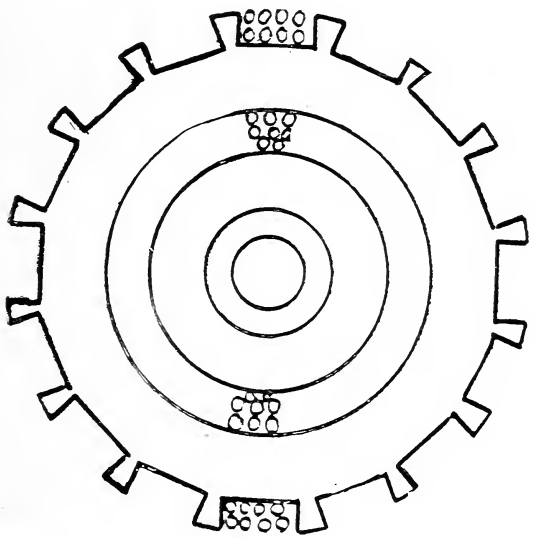

The early manner of holding this core was by means of two taper plugs of wood forced into the inside by nuts on the shaft. See Fig. 5. This injures the insulation and prevents the ventilation of the wire. Besides, it is difficult to wind the wire evenly enough on the inside of the ring to make the armature run true. See Fig. 8.

In American practice the sheets have notches,

Fig 7

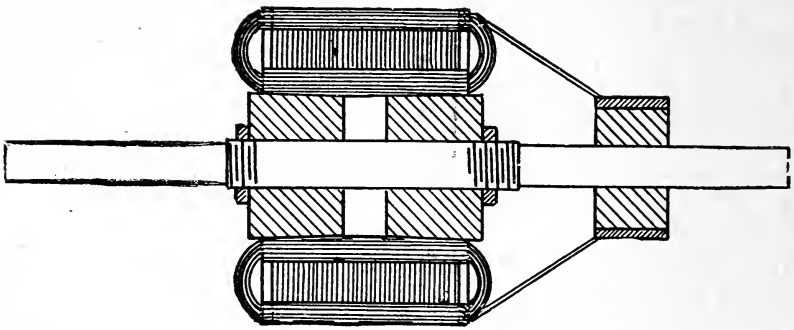

into which slip arms of two "spiders." See Figs. 9 and 10. These are of brass and firmly keyed to the shaft. Stiff wrought-iron rings at the ends of the armature core receive the pressure of the spiders and hold the sheets firmly together. The wire is threaded in and out as in the other case, to make a continuous winding around the ring, with branches at necessary places for the commutator segments.

When an accident occurs to a cylinder armature it is usually necessary to take off all the wire to get to the damaged coil. With a ring core one coil is not encumbered with others on top, and it is not a serious matter to take out and replace one coil without disturbing the others.

As in the case of drum armatures, a safe calculation is 1 volt for every 2 feet of active wire. Very small machines are not so efficient as large ones. A core 7 inches in outside diameter, 5 inches in-

side, and 4 inches long, wound in 48 sections with No. 15 wire would furnish a current of 80 volts and 15 amperes. The wire should be two layers deep, and the armature driven at about 2,200 revolutions per minute.

Fig. 8.

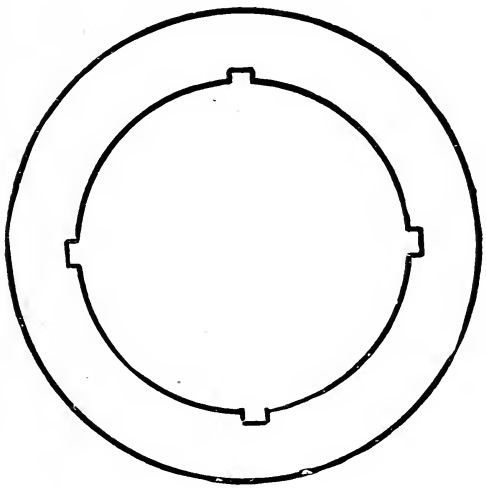

A field magnet of style of Fig. 1 or 8 would be suitable. By using wire of one-half the size and making twice as many turns, a four pole field (Fig. 9) could be used. Twelve pounds of No. 12 wire would be sufficient for the field spools. The same shunt winding as used for the drum armature would serve if desired.

For mechanical considerations the speed of an

armature should be kept low; the ring form, with its large diameter gives requisite peripheral velocity without unduly heating the bearings.

Those armatures just described are designed for furnishing continuous currents. A dynamo always generates currents in alternating directions. Commutators are used to direct them all in the same direction. An alternating current may be considered as in the more natural primitive state.

Fig. 9.

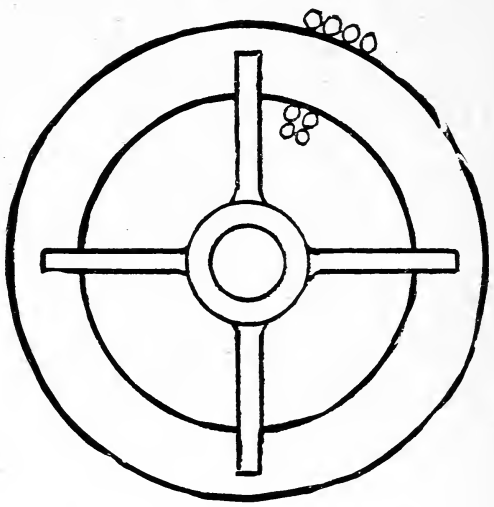

If in Fig. 1 the ends of the coil were carried to two separate rings and a brush bear on each, an alternating current could be obtained. As there is but one coil, the alternations would be too infrequent for most purposes. To multiply these pul-

Fig 10

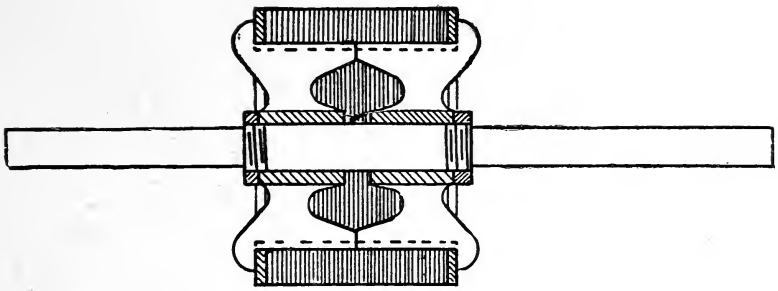

sations, armatures are made with many coils and the field magnets with an equal number of pole pieces. If coils are wound in the shape to fit the armature of Fig. 1 and 2, but slipped over the projections of the core of Fig. 3, so that each may fill one-half of two adjacent grooves, or spaces, a common arrangement for an alternating armature will result. All the coils are connected in series, and the ends carried to two collector rings. When the core has no projections the coils are simply laid flat on the surface, held in position by pins and wrapping wires. The ring core is best adapted to alternating current dynamos, as the radial mass of iron is small, consequently will heat least, yet give a high peripheral speed. Usually the fields must be separately magnetized from a small continuous current machine, but it is possible to make "self-exciting alternators."

Extreme care must be observed in preparing an armature core for winding. All corners are to be

well rounded, so as not to cut through insulation. Several layers of paper, canvas, or mica, well shellaced together, are put on smoothly. The ordinary insulation on wires is not sufficient where they cross each other, but in addition must be carefully wound with tape. After winding, the armature should be balanced with sheet lead, and then the wrapping wire, well separated from the copper winding, put lightly on in narrow bands. Wires leading to the commutator segments should be large and well insulated.

Properly made there is no electrical difference between the drum and ring forms for armatures. Where a narrow machine and high speed is desirable the drum form is best; while for a short shaft and slow speed the ring offers valuable advantages.

CHAPTER VIII.

THE TELEGRAPH AND TELEPHONE.

THE telegraph instrument now most commonly used is the Morse instrument. It consists of an electro-magnet which, when a current is made to pass through its coils draws down an armature for a long or short time as the operator may wish. This is done by simply pressing down a key for a correspondingly longer or shorter period of time. This armature and electro-magnet is called a sounder. On page 166 will be found an illustration of the Morse instrument, for the use of learners, connected with one cell of battery, and on page 168 will be found an illustration of the relay.

If the reader will study the diagram, Figure 1, he will be able to understand the wiring and operation of a telegraph line.

Both sets of instruments are identical; indeed if other stations are inserted between the terminal of the line, there is no alteration. When no message is being sent, the switch *h*, beside the "key" *g* is kept closed. Then the circuit is not broken, and when any key is depressed, all the receivers

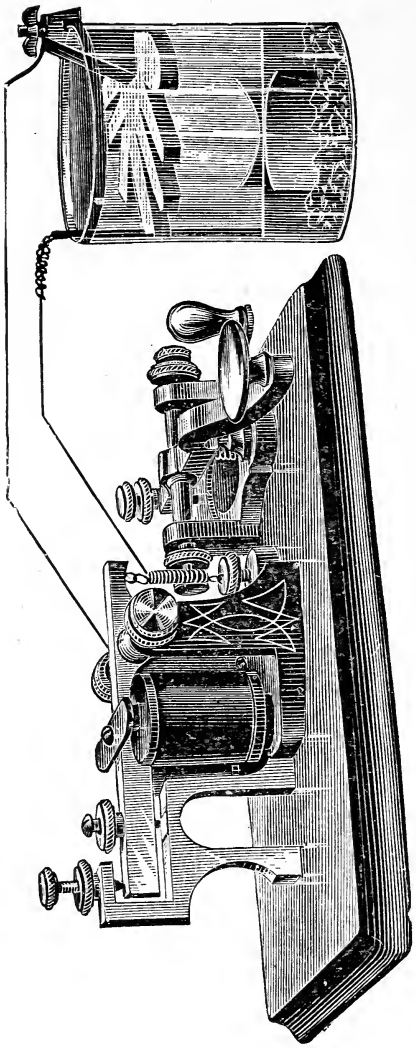

TELEGRAPH INSTRUMENT.

throughout the line receive the impulse. As the current in a telegraph wire is exceedingly small, delicate apparatus alone can record the passage of the current. Usually the flow is too weak to work a "sounder," so a "relay" *b* is inserted. The magnet in this is very sensitive and simply attracts a delicately balanced armature, *c*, that is held away normally by a slender spring. On this armature is a finger that makes contact with the screw *d*, when a current is flowing through the coils of *b*. This contact closes a local battery (*f*) circuit, which is sufficiently strong enough to operate the sounder *e*.

Line batteries *i* are needed at one end only, if there is good insulation on the poles. Local batteries *f* to work the sounder must be at every receiving station.

With a short line the relay magnets and local batteries can be dispensed with, and the line batteries connect directly with the sounders.

Should the reader wish to construct an experimental instrument, he may do so by working out the following directions.

The cores of the magnets are to be made of $\frac{3}{8}$ inch round wrought iron—Norway iron preferable, on account of its great purity and softness. Cut two pieces $1\frac{1}{2}$ inches long and tap one end of each for a $\frac{1}{8}$ inch machine screw. Fit over each end of each of them a washer made of fiber or ebonite,

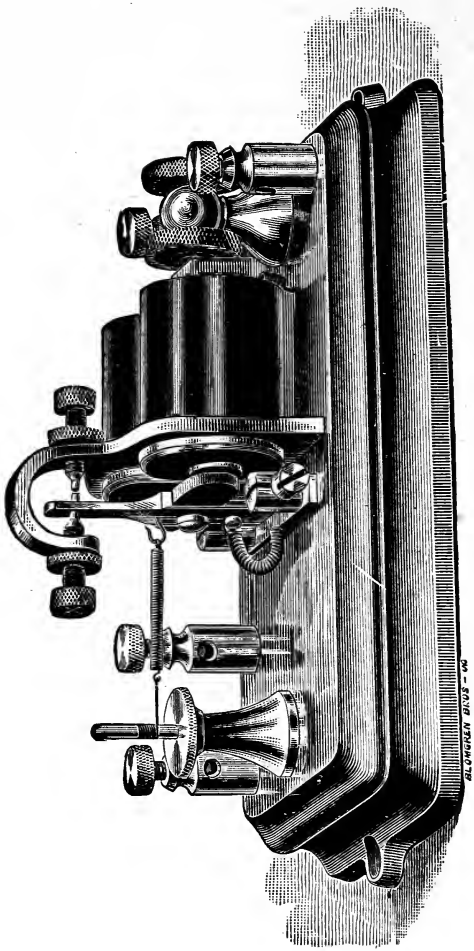

RELAY.

1 inch in external diameter and $\frac{1}{8}$ inch thick; they must fit tightly. Insulate the cores between the washers and bore a $\frac{1}{16}$ inch hole in one washer on each spool to take out the beginning wire and then put the spools in a lathe and wind them full of No. 24 insulated wire. It is customary to slip over the spool when the winding is finished a casing of ebonite both as a protection to the wire and to improve the appearance, but this is not essential.

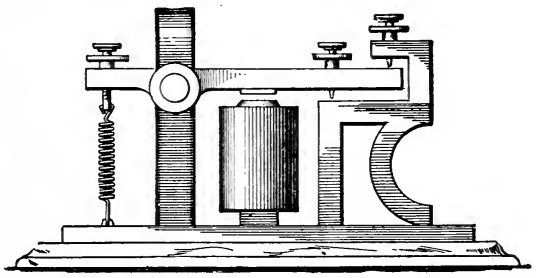

TELEGRAPH SOUNDER.

The yoke is also soft iron $\frac{3}{8}$ of an inch wide, $\frac{3}{16}$ of an inch thick and $1\frac{1}{2}$ inches long. Drill a $\frac{1}{8}$ inch hole in each end, $1\frac{1}{4}$ inches distant from each other and one in the middle tapped for a $\frac{3}{16}$ inch screw thread. Screw the spools you have wound to the yoke making a *u* shaped electro-magnet. This magnet stands on a base made of $\frac{1}{4}$ inch sheet brass, $2\frac{1}{4}$ inches wide and 5 inches long. Drill a $\frac{3}{16}$ inch hole through the base $2\frac{1}{4}$ inches from one end and midway between the sides: this hole

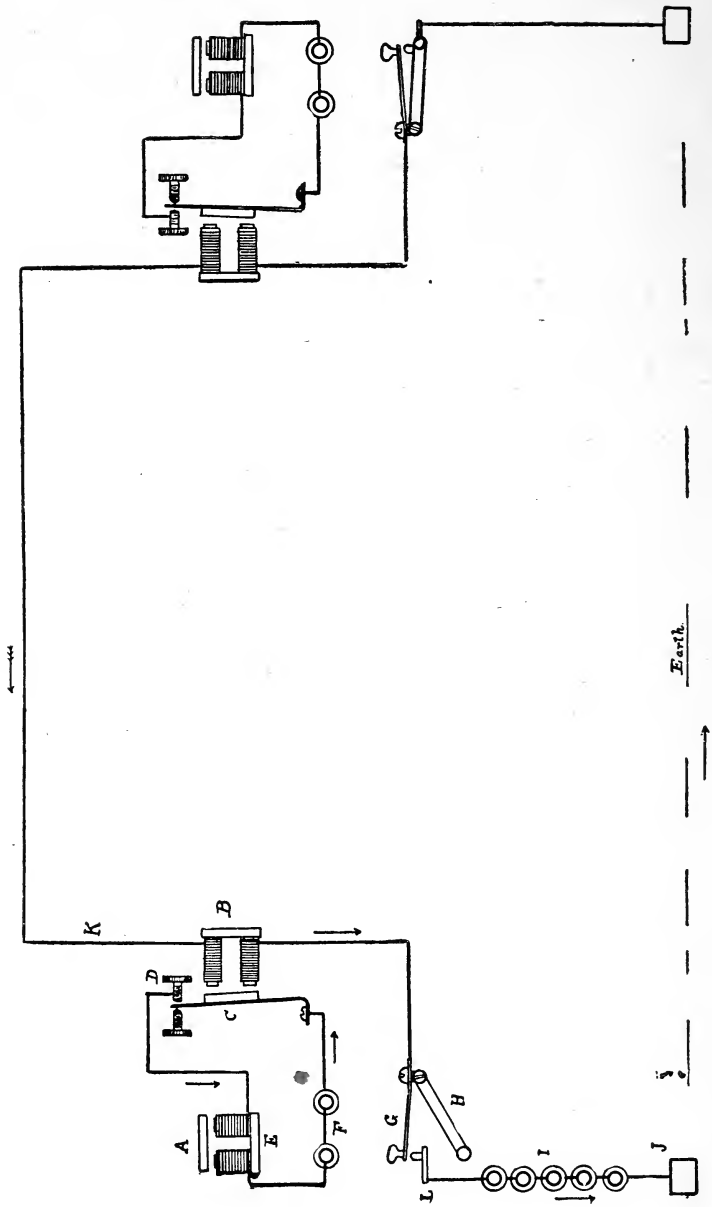

FIGURE I.

is for the purpose of screwing the magnet to the base. Cut a strip of $\frac{1}{8}$ inch sheet brass $\frac{5}{16}$ of an inch wide and $10\frac{1}{8}$ long; bend it into a *u* shape, making the curved portion a semi-circle of 2 inches diameter; at 2 inches from each end drill and tap a hole for a $\frac{1}{2}$ inch screw.

Now file a groove in the edges of the two sides of the base-plate, $\frac{5}{16}$ of an inch in width, and $\frac{1}{8}$ of an inch deep, the edge of the groove to be $1\frac{3}{32}$ inches from the end of the plate the magnet is nearest. The legs of the *u* piece fit with this groove and are to be secured to the base with $\frac{8}{32}$ machine screws.

The anvil had best be cast from brass, making a pattern for the same from Fig. 2. The bottoms of the legs of the anvil are to be tapped for $\frac{8}{32}$ machine screws, and holes drilled in the brass base through which to pass the screws from underneath and secure the anvil. The straight leg should be 3 inches from the end of the base, and toward the magnet, as shown in the drawing of the completed instrument. The hole in the short arm is $\frac{1}{4}$ of an inch from the end, and is drilled and tapped for a $\frac{1}{8}$ inch screw.

Another brass piece which should be cast from brass, should be made in accordance with Fig. 3. The holes *y* and *z* are to be drilled and tapped for a $\frac{1}{8}$ inch screw, and *x* drilled with a No. 30 drill. Through the hole in the little downward projection of this piece is to be driven a piece of No. 14

Stubbs' steel wire, pointed at each end, and well hardened.

A soft iron armature of the shape and dimensions shown in *c*, Fig. 3, is screwed on the upper side of the brass casting, to the hole *y*. Four thumb screws and check nuts will be required, and may be made by following the dimensions given at

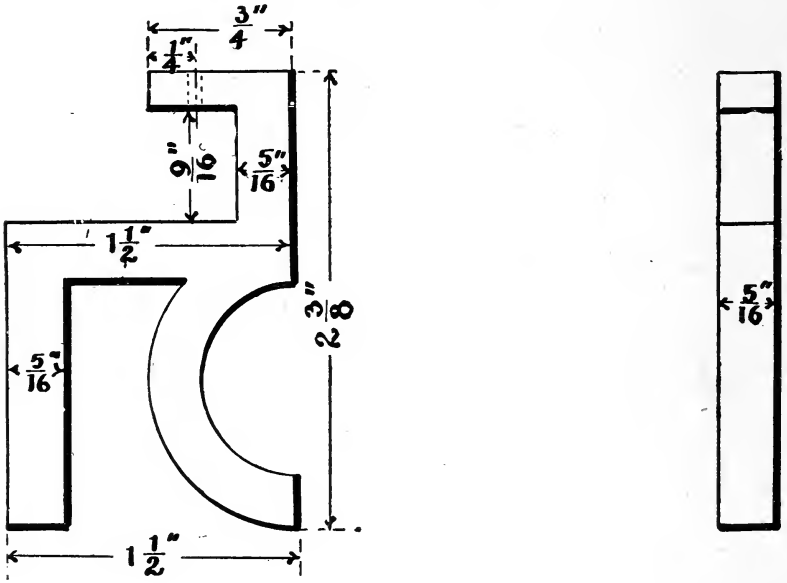

FIGURE 2.

b, Fig. 3. Two of the thumb screws should have their ends slightly countersunk or drilled with a very fine drill, to form bearings for the pointed ends of the Stubbs' steel pivot. Two more screws and nuts are needed: the screw to be made from $\frac{1}{8}$ inch brass wire, 1 inch long, and threaded the

entire length, and the nut to fit this thread. Through one end of this screw drill a small hole. At $\frac{3}{8}$ of an inch from the end of the base plate, and directly under the projecting end of the armature carrier back of the pivot, solder a small hook. Make a closed spring out of No. 22 spring brass wire. We are now ready to put the machine together.

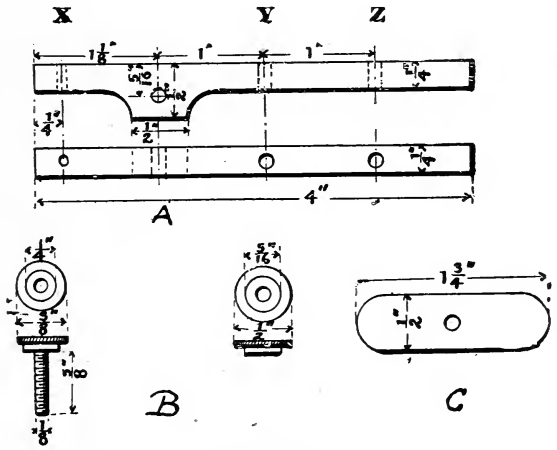

FIGURE 3.

In the first place, the brass base-plate should be mounted on a neat wooden base, a little larger than the brass plate, and on the wooden base place two binding posts. Screw the magnet to the base-plate, if you have wound both cores in the same direction and have screwed them to the yoke so that both starting ends are together, connect the two inside wires together and the remaining ends to the binding posts, or, in other words, see that

the wires are connected in such a way that if the magnet were bent out straight, the current will pass around the bar in one direction throughout its whole length. Screw the anvil to the base plate and put in the adjusting screws and nuts as shown in the general drawing.

Place the armature in position and adjust it so that it moves easily on the pivot point by means of the adjusting screws in the sides of the *u* shaped piece. Put the nuts on the piece of threaded wire you made and slip it into the hole in the end of the armature. The end with the hole in it should be down, and into the hole hook one end of the spring you wound, and cut off the other end so that it will reach the hook beneath with a little stretching, and hook it there. The tension on the spring can then be regulated by the nuts on top, and should be such that the armature will be pulled against the top stop when freed.

Adjust the screws in the anvil so that the armature will have $\frac{1}{8}$ of an inch play between them, and at its lowest point the soft iron piece will be $\frac{1}{32}$ of an inch from the ends of the magnet, and your sounder will be ready for work, that is to say, whenever you put a current through the coils the armature will draw down and make a click, and when the current is taken off, will fly up and make another.

The place in which the instrument is set makes

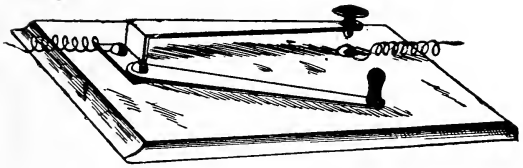

TELEGRAPH KEY.

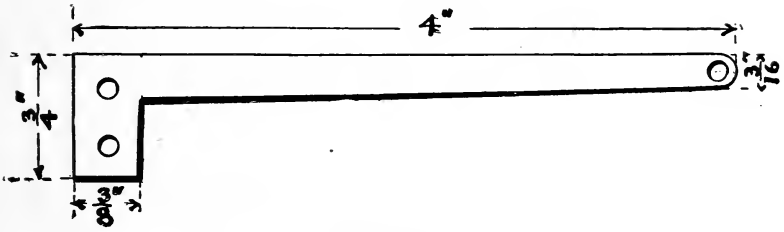

FIGURE 4.

a good deal of difference in the sound. A sounding board of some sort is necessary if it is desired to have the instrument make much noise. A good table answers for this very well, and often the instrument is placed upon a plate of glass or has a bell or curved piece of tin attached to the anvil for the purpose of increasing the volume of sound. The Morse Alphabet is given below.

a	b	c	d	e	f	g	h
·—	—···	—·—·	—··	·	··—·	——·	····
i	j	k	l	m	n	o	
··	·———	—·—	·—··	——	—·	———	
p	q	r	s	t	u	v	w
·——·	——·—	·—·	···	—	··—	···—	·——
x	y	z	&	.	?		
—··—	—·——	——··	·—···	·—·—·—	··——··		
,	1	2	3	4			
——·——	·————	··———	···——	····—			
5	6	7	8	9	10		
·····	—····	——···	———··	————·	—————		

To break and make the circuit and thus work the instrument, we must have a key which can be made from a piece of spring brass, as shown in Fig. 4.

Cut and bend the brass in the shape shown, and screw a wooden or ebonite button to it. The screw head on the under side is to be filed off a little flat and another screw placed beneath, so that its head may be touched by the other when it is pressed down. The wires are to be connected to the strip and screw head as shown, though of course this is to be done underneath the board on which they are mounted, so that the wires will not be seen. The circuit must be kept closed except when a message is being sent, so another strip of brass is to be screwed to the first, so it will move freely and will close the circuit when swung against the lower contact. A suitable handle is to be made for this.

The contacts of the key are apt to become fouled by the dirt and sparking on breaking the circuit, and must be occasionally cleaned. The fouling from the last cause can be obviated somewhat by soldering small pieces of platinum to the contacts as it does not oxydize as readily as most other metals.

THE TELEPHONE.

Electrically speaking the telephone is a very simple piece of apparatus. A coil of fine wire

upon a permanent magnet in front of a plate of thin iron is the essential requisite.

The vibrations of the thin plate, which follow those of the air, alter the distribution of the lines of magnetic force around the coil and set up in it electro-motive forces and therefore currents corresponding to these vibrations.

These currents carried to a similar instrument, will cause its diaphragm to vibrate in a like manner, and set up sound vibrations in the air near it. The magnet should be long in proportion to its diameter in order to retain its magnetism to any considerable degree, $\frac{1}{4}$ of an inch diameter to six or seven inches long will be a good proportion. It must be of the best tool steel, hardened glass, hard and strongly magnetized. The best steel is what is known as Tungsten steel, which has the property of retaining magnetism to a marked degree.

The wire used is silk covered copper about No. 36, and is wound into a spool, made by placing two discs of thin hard wood upon the end of the magnet, a quarter of an inch apart. The space between them must of course be insulated by winding a thickness of paper on the bare iron.

This spool is to be wound full of wire. See Fig. 1.

For a case turn up a piece of wood the length of your magnet, 3 inches in diameter at the large end, and 1 inch at the small end, and with a cavity

in the large end 2 inches in diameter, and $\frac{3}{4}$ inches deep.

Bore a hole through the centre from end to end just large enough to allow the magnet to slip through and for a set screw to hold it, put a wood screw in one side near the end as shown in Fig. 2.

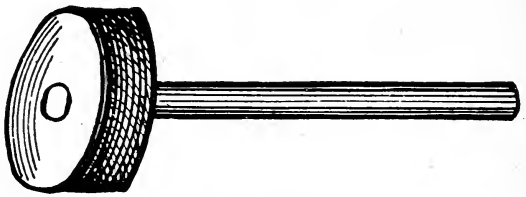

FIGURE 1.

The lead wires can be taken out of the sides of the large end of the case or can be passed through the handle and out at the end, as is customary with the shop made article. The last is of course the neatest way but is not always convenient.

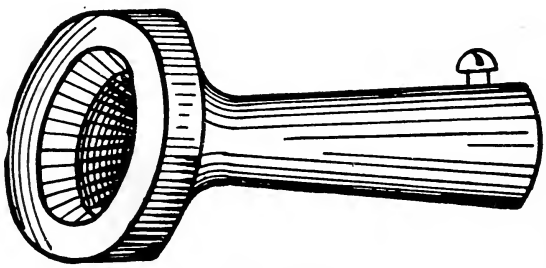

FIGURE 2.

These wires should be passed into the inside of the box and there soldered to the fine wires from your coils. On the outside they should terminate

in small binding posts, so as to prevent the possibility of their being worked about and breaking off the fine wires.

A cap should now be turned up to fit the large end of the case, something like the adjoining sectional sketch — Fig. 4 — and screwed to it through the flange.

The diaphragm can best be made of a piece of "tintype" plate which can be procured from any photographer.

FIGURE 4.

A piece of ordinary thin tin plate would answer but the other is better. Cut the plate to a circle the same diameter as the large end of the case and punch holes where the screws come, and screw it down under the cap to the case. You must of course have two such instruments, if you intend to carry on conversation and these will answer for both transmitter and receiver. Adjust your magnets by removing the cap and slide the diaphragm partly off, so you can see the magnet beneath, and

slide this in or out until it clears the plate by $\frac{1}{32}$ of an inch, and hold it in this position by the set screw.

Replace the diaphragm and cover and connect your two instruments by two wires. You are now ready for conversation, which there should be no difficulty in maintaining, if everything is properly

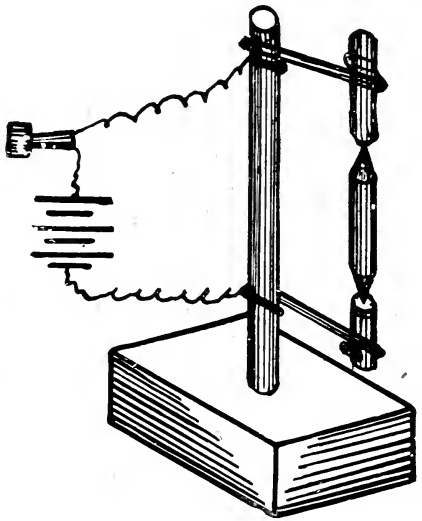

FIGURE 5

made and there are no breaks in your fine wire coil. This is a point that must be looked after carefully as breaks are very likely to occur with such small wire.

The telephone is put to other uses besides the transmission of speech, chief among which is the detection of minute currents of electricity. This

is done by making and breaking the circuit with the telephone in it generally by some form of interrupting device or buzzer, when of course if a current is flowing, its presence is indicated by clicks of the diaphragm.

Another use is in connection with the microphone to enable one to hear very faint sounds. The microphone is simply two pieces of carbon placed in light contact with each other upon a sounding board. A simple form is shown in Fig. 5.

Two pieces of willow charcoal are held in the spirals of two brass wires, which can be moved up and down the wooden standard.

Between them is a pointed piece of charcoal which rests in a hollow in the lower piece and touches the upper one *very lightly*. The wires are attached, as shown, so as to include a battery and telephone in the circuit, and if the box used as a base is made of thin wood very slight sounds may be heard, which originate upon it. Perhaps it would be well to say that until 1893—patents cover the use as well as the manufacture of the telephone.

CHAPTER IX.

ELECTRIC BELLS—HOW MADE, HOW USED.

An electric bell in common use consists of an electro-magnet having an armature to which is attached a small hammer, so arranged that by sending a current through the circuit the armature is made to vibrate and the hammer beats against a gong. The bell is usually operated by a battery, and the circuit may be closed by simply pressing a small push button, thus causing the current to flow along the line and around the coils of the electro-magnet, which draws the armature toward it. A contact breaker consisting of a spring tipped with platinum which rests against a platinum tipped screw is attached to the armature. This makes and breaks the circuit which causes the hammer to beat against the gong and then fall back against the screw which immediately closes the circuit again, causing the armature again to be attracted toward the magnet, and so on. In fact an electric bell is a miniature electric motor. For the benefit of the reader who wishes to construct an electric bell the following directions are given.

The appended sketch will give a general idea of

the construction of the bell. The magnet as will be seen is simply a single coil of wire and is surrounded by a sheath of soft iron which forms one pole while the core of the magnet forms the other. Make the core of a piece of good soft round iron $\frac{3}{8}$ of an inch in diameter and $2\frac{1}{4}$ inches long and to one end attach, by a screw or by welding, an iron

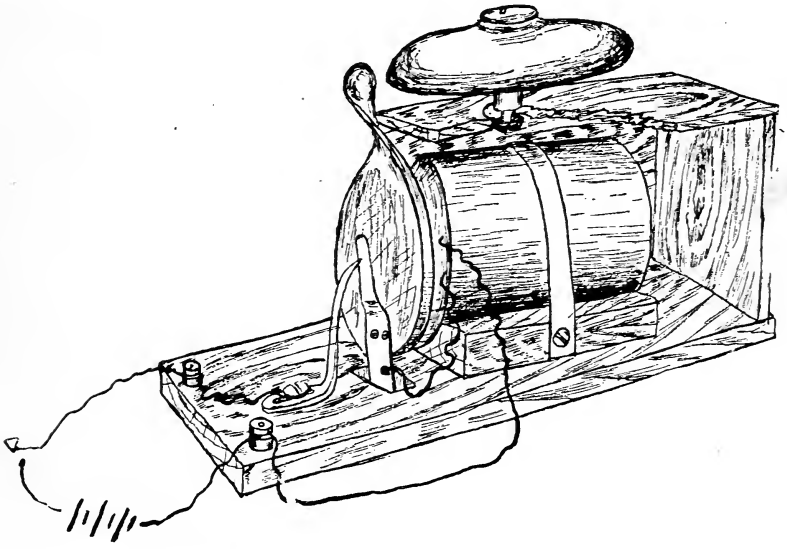

disc $1\frac{1}{2}$ inches in diameter and $\frac{1}{8}$ of an inch thick. On the other end place a tight fitting washer of fiber or hard wood $1\frac{1}{8}$ inch in diameter and $\frac{1}{8}$ inch thick, forming thus a spool on which to wind the wire. See Fig. 2.

Insulate the iron parts carefully with paper shellaced on where the wire will touch it and after drill-

ing a hole in the fiber washer near the core to take out the starting end, wind on the wire tightly and smoothly. Use for this purpose No. 24 cotton-covered copper wire and wind the spool up nearly even with the fiber washer and take out the end of the wire. Wind a strip of paper on top of your wire

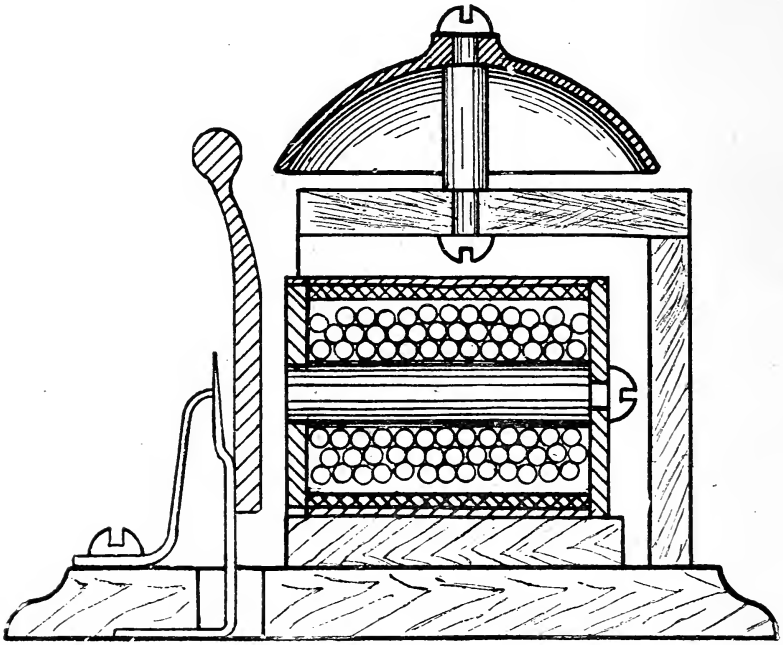

FIGURE 1.

until you have a cylinder of the same diameter as the washer, and shellac it fast. Your iron disc should now project $\frac{3}{16}$ of an inch all round. Now turn up a wooden cylinder the same size as the outside of the winding you have just completed and use this as a form on which to make the iron

sheath. Take a strip $2\frac{1}{8}$ inches wide of soft sheet iron, such as is used in making stove pipes, and wrap this tightly around the form until its outside diameter equals that of the iron disc.

If you have facilities for doing so, sweat the end of the strip down to the turn beneath it, otherwise you will have to wind on it several turns of wire to

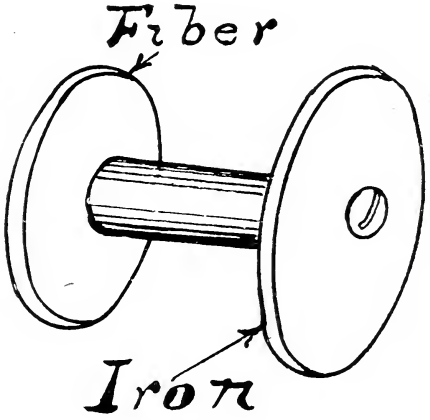

FIGURE 2.

keep it from untwisting like a watch spring. Slip this sheath over the coil and up tight against the disc and wedge it there by small pieces of paper. Make the armature of a piece of iron about $\frac{3}{32}$ of an inch thick and cut it in the form shown in Fig. 3, the larger circle having the same diameter as the outside of the sheath and the smaller one being about $\frac{1}{4}$ of an inch in diameter and twisted so that its plane is at right angles to the plane of the other, as shown in the general

drawing. The length of the neck between them will depend somewhat upon the way you arrange the different pieces, the size and shape of the bell, etc., and it had better be measured for when all the other parts are in place.

Make the spring of spring brass about $\frac{1}{32}$ of an

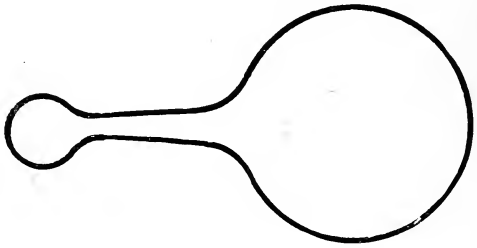

FIGURE 3.

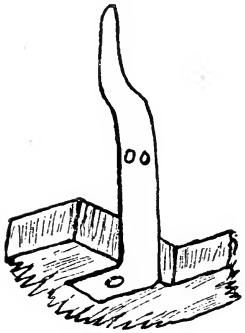

FIGURE 4.

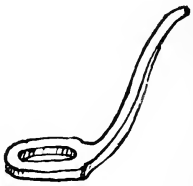

FIGURE 5.

inch thick and $\frac{1}{4}$ of an inch wide and shaped as in Fig. 4. It is to be fastened by its foot to the under side of the base board so as to give it a long lever arm, and brought up through a hole as shown in the general drawing. Rivet it to the armature by at least two small rivets. Its extension above forms

the contact spring which must be filed down thinner than the rest and have a small silver contact piece soldered to it. Make the other part of the contact of a piece of sheet brass about $\frac{1}{16}$ of an inch thick, cut and bend it as shown in Fig. 5. The slot in the middle of the broad end serves to adjust the contact distance, when a round head wood screw passes through it into the board.

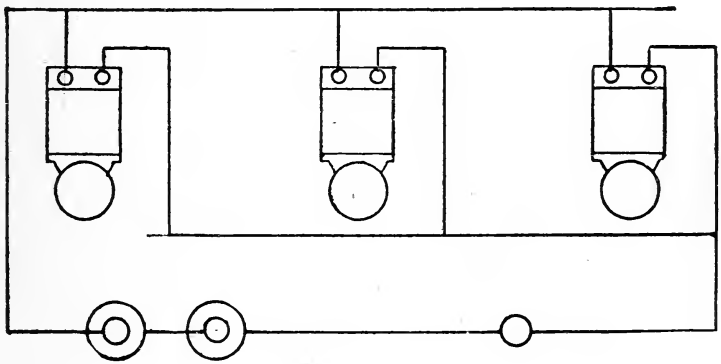

FIGURE 6.

We are now ready to assemble the pieces Mount the magnet in a block and fasten it down by a band of sheet brass or tin, as shown in the general drawing. Fasten this block to a base board and cover the magnet with a small box, (this is shown broken away in Fig. 1), with one end open. The open end (that is, that with the fiber washer on it,) of the magnet must project slightly from this end of the box. Place the armature in posi-

tion in front of the magnet leaving about $\frac{3}{32}$ of an inch clear space between them. Attach your gong to the top of the box where it will be struck by the clapper when the armature is drawn up. The general drawing shows the method of connecting up, and when these connections are properly made and a battery inserted in the circuit, the bell should ring vigorously.

Of course some judgment must be used in making the adjustments, that is, the contact piece

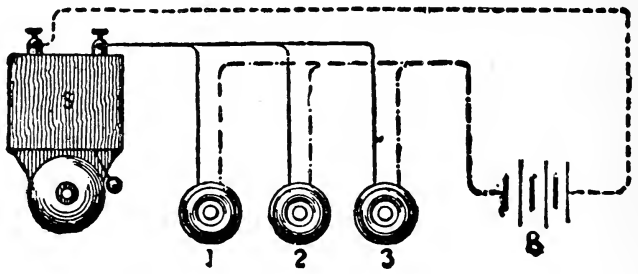

FIGURE 7.

and spring must touch lightly when in a state of rest and must break circuit when the armature is attracted by the magnet and before it strikes the bell.

Some different ways of wiring bells are shown on pages 187, 188 and 189.

Fig. 6 shows bells in multiple actuated by one button. Fig. 7 shows one bell actuated by three different buttons. Fig. 8 shows three bells in multiple actuated by three different buttons.

The description of these three simple ways of wiring is given to help the reader to understand or enable him to do such simple wiring as he may want to do at home. Of course it is not to be supposed that he could do a complicated job of work,

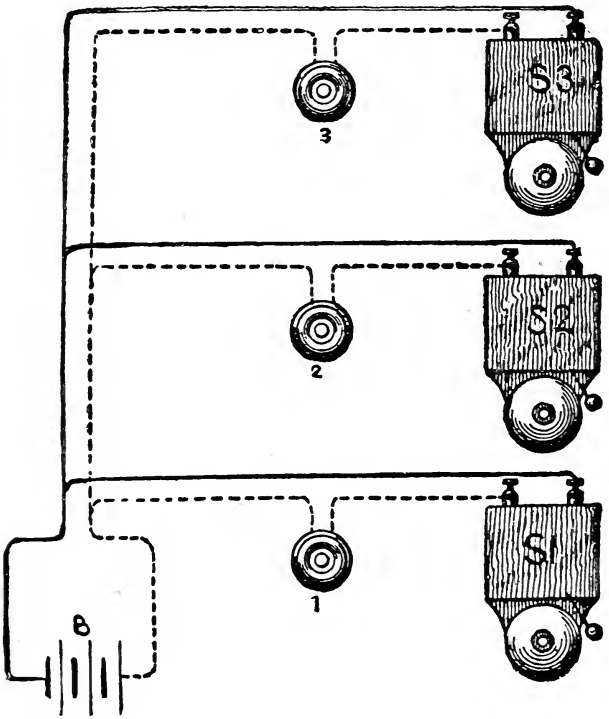

FIGURE 8.

such as wiring hotels or large factories where a large number of bells would be required, but for ordinary work the writer thinks a careful study of the diagrams will enlighten the reader sufficiently to assure his success in ordinary work at home.

CHAPTER X.

HOW TO MAKE AN INDUCTION COIL.

PROCURE a piece of hard rubber, bore and turn it to dimensions and shape given in Fig. 1; drill two small holes about $\frac{1}{16}$ diameter in the flange on one end, then drive on an arbor — not too tight — and proceed to wind on two layers of No. 15 double-covered cotton wire; this is called the primary coil.

The terminals of this coil are to be brought through the two holes previously drilled in the flange; fasten the wire inside the flange by stout thread that has been placed underneath the first layer having the ends left hanging out. Now shellac this wire all around and neatly put on a layer of stout paper and shellac. For the secondary or outside coil, use No. 26 or 30 double-covered wire; put on about eight layers and fasten to the opposite end of the spool in the same manner as the first. Bring the terminals, one on each side of the coil, down close to the inside of the flange in a neat coil and thence to the binding posts shown in Fig. 7 A, and the secondary coil is connected complete.

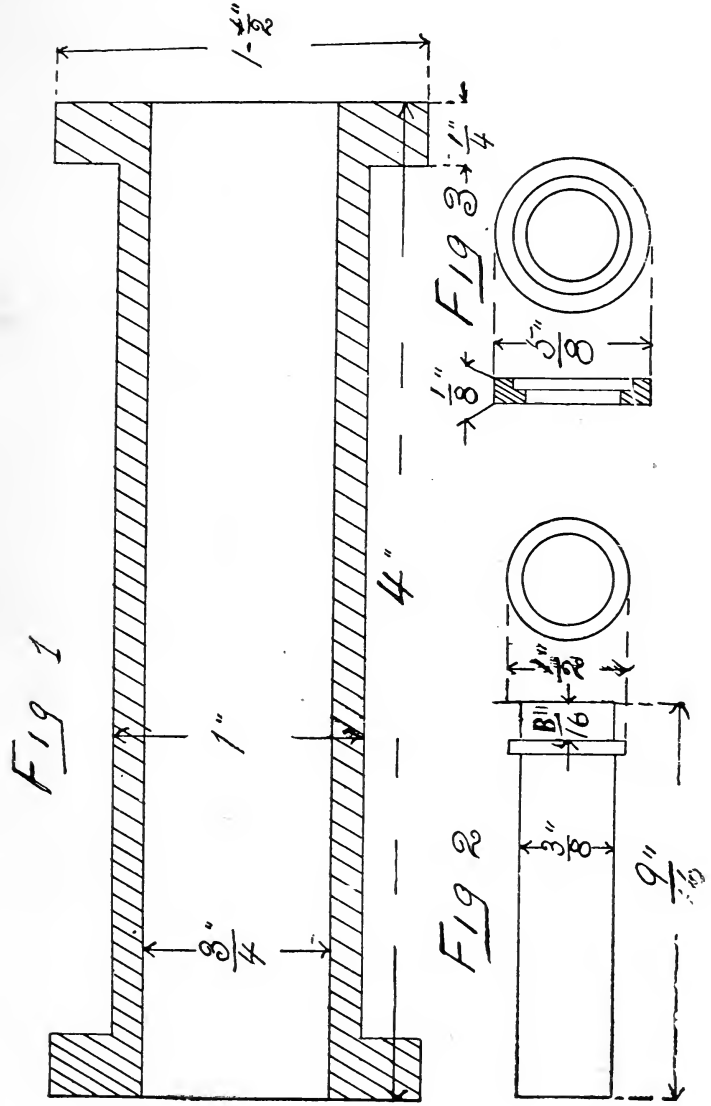
Fig 1
Fig 2
Fig 3
1"
4"
3/4"
1/4"
5/8"
1/8"
3/8"
9/16"

The next object is the circuit-breaker, which is made from a piece of soft Norway iron; turn it with a shoulder as shown in Fig. 2. Make two washers—Fig 3—out of fiber or hard rubber, slightly counter-boring one to conform to the shoulder left on the iron core and have them driven on tightly, up at the opposite end of the core with a set chisel to prevent the wire forcing the washer off

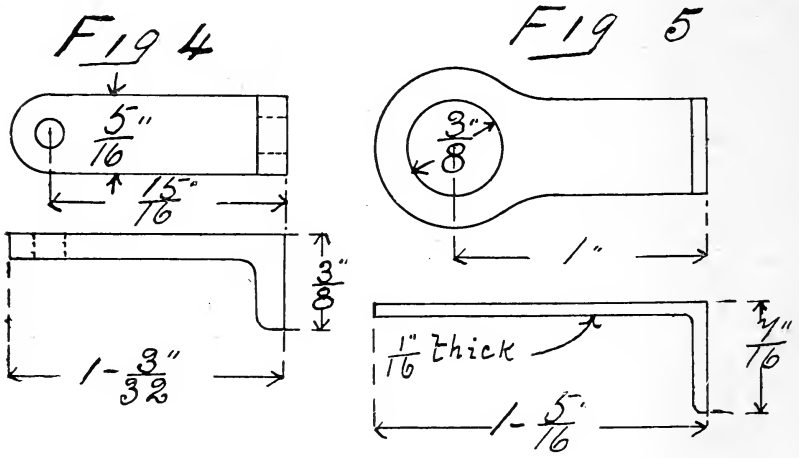

from that end, and cover the core with stout paper cemented on by shellac. Now wind on three layers of No. 15 wire having a terminal at each end of the coil; fasten the wire at each end in the manner described and at the end shown in Fig. 7 B; bring the wire down through the board which has previously been grooved to receive it and connect it to the spring of the circuit-breaker by a screw and a nut as shown in Fig. 7 B—the nut being underneath.

Make the spring from a piece of thin German silver, and attach, by means of a rivet or some solder, a small piece of soft iron at the end. Bend the end which rests on the board and drill two holes in it having the one nearest the upright position of the spring considerably larger than the screw which will be used to fasten the standard—Fig. 4—to the board. The reason for so doing is to keep the screw from forming a contact with the spring which would make a short circuit and prevent the coil from working; for the standard, use $\frac{1}{8}$-inch soft brass which can be easily bent. Drill and tap the hole for the knurled screw which is about 10—24.

The standards to support the coil of the circuit-breaker—Fig. 5—can be made of $\frac{1}{16}$-inch sheet brass and fastened to the board, being bent inward at more than right angles, they will hold the coil very secure when it is forced in between them. Now the connections can be made and by a study of the assembled view these can be readily comprehended. It will be perceived that the coil of the circuit-breaker is placed in the same circuit with the primary coil. This is accomplished by bringing the lower terminal of the primary coil and the terminal of the circuit-breaking coil through the board as shown, and connecting them underneath, while the opposite terminal of the circuit-breaking coil also is brought through the board and

F196

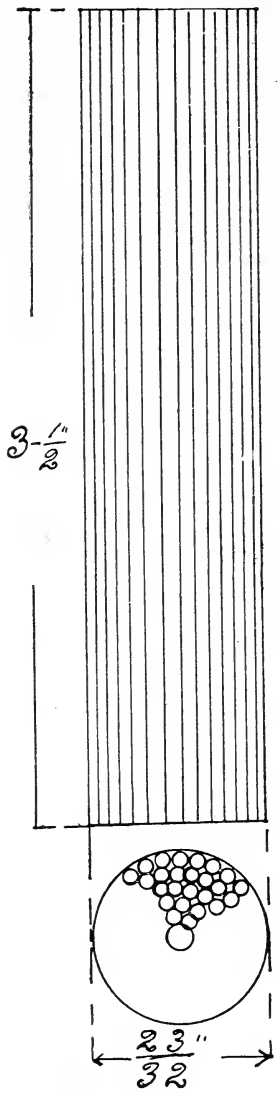

connected to the vibrating spring, which in its turn along with the adjusting screw standard is fastened on the board at a proper distance from the coil, which will leave the contact points, or more properly speaking, the armature about $\frac{3}{16}$-inch from the core, then by means of the adjusting screw the distance can be increased or decreased as desired. In placing the vibrating springs and the adjusting screw standard, they must be perfectly insulated from one another. A piece of mica about $\frac{1}{32}$-inch thick is interposed between the standard and the spring, and the spring having a large hole drilled in it so as to clear the screw that fastens all down together on the board. The next consideration is the core for the induction coil. It can be made of one solid piece of soft iron if desired, but the writer prefers to make it from a bundle of soft iron wires all being soldered together as shown in Fig. 6. An easy way to construct this is to get a piece of brass tube about 2 inches in length which has a hole in it a shade smaller than the hole in the spool of the coil. Now cut up all the wires of a length—$\frac{1}{16}$-in. wire is a good size—and have them free from dirt and grease. Place the tube on end on a flat slab of any kind and proceed to fill it up as full of the wire as possible. Having melted some solder in a ladle for soldering the ends of the wires, fasten them all together at the end protruding out of the tube by binding a wire around them about $\frac{3}{4}$-in.

from the end and then dip them in the melted solder up to the binding wire. Push the wire through the tube till they protrude out as much as they did on the other end and repeat the operation. Now the wires are permanently fastened together in one bundle and the binding wires can be removed. Turn up a neat knob of hard wood or hard rubber, as preferred, and drill a clearance

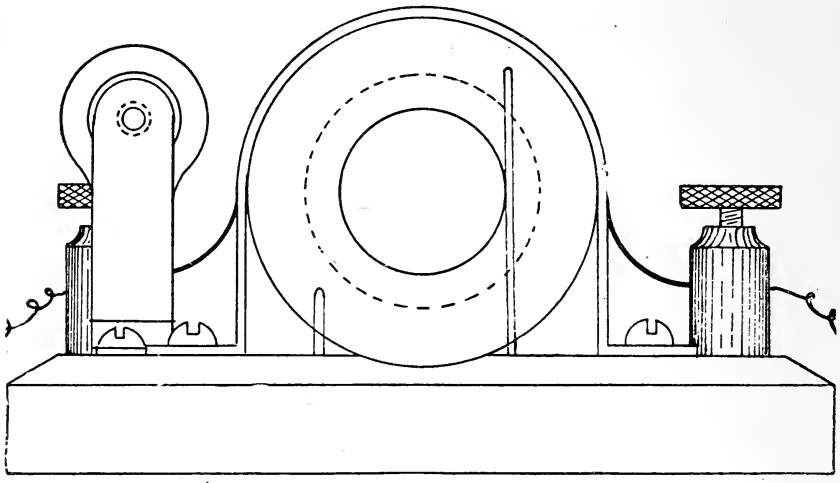

FIGURE 7, A.

hole about $\frac{3}{16}$-in. through the centre, next drill and tap a hole $\frac{10}{24}$-in. in the centre of the core and fasten the knob on and the core is complete. To fasten the coil to the board, cut a groove in it of about $\frac{1}{8}$-in. deep and to conform to the diameter of the spool ends. Cut two strips of $\frac{1}{32}$-in. brass the same width as the spool ends are thick, bend and drill as

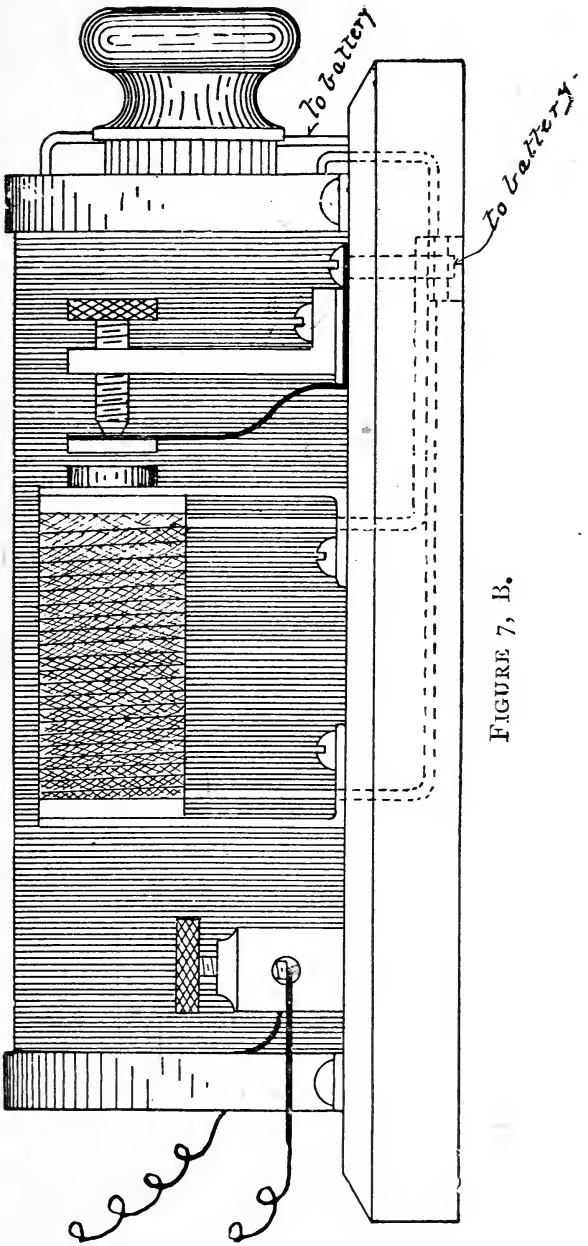

FIGURE 7, B.

shown in Fig. 7, B while the same view shows them attached. Make the handles, from which the shock is taken, of brass tube about ½-in. outside diameter and about $\frac{1}{32}$-in. thick, turn two small discs ⅛-in. thick and drive them, one in each end of each tube and solder them. To these ends fasten wires about 3-ft. long, clear the insulation of the other end and fasten in the binding posts that are in contact with the secondary coil, and now with the addition of a battery the instrument is complete.

By polishing all the brass work and making the knob on the end of the core of hard rubber, the instrument will present a very neat and attractive appearance. Several other points of embellishment might be added which the writer will leave for the amateurs fancy to dictate.

CHAPTER XI.

THE INCANDESCENT LAMP.

The incandescent lamp has become familiar to almost everyone who lives in a large city. We see it in practical use in most public buildings and in

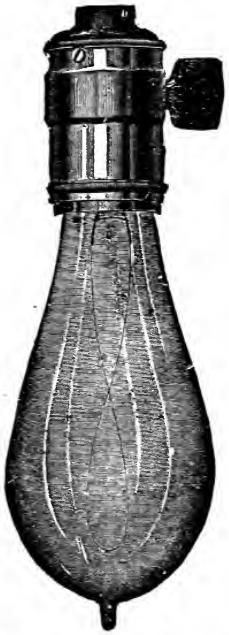

THOMSON-HOUSTON LAMP.

many private dwellings. It is also used extensively to furnish light in our factories and to replace our old fashioned street gas-lights. Considering the

short time (which is about ten years) since the incandescent lamp was invented, it has made rapid strides toward perfection.

On page 199 will be found an illustration of an incandescent lamp, such as is used for all ordinary purposes at the present time.

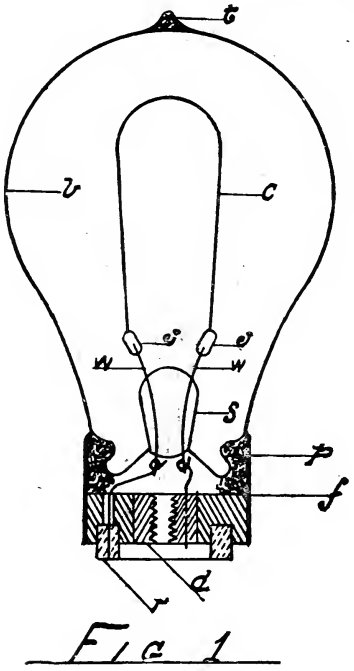

FIG 1

The lamp consists of a glass globe or bulb, from which the air has been exhausted, containing a carbonized fiber of bamboo. This carbonized fiber is attached to two platinum wires fused in the glass, the free ends of the wires being connected to the copper sockets of the lamp, which

are insulated from each other by Plaster of Paris. The wires are then connected to the external circuit. Fig. 1 is a sectional view of a familiar type of the 16 candle-power lamp, *c* being the carbon loop; *b* the glass bulb; *f* the collar; and *w w* the platinum leading wires. In order to produce light the carbon loop is brought to a white heat or incandescence, by the heat energy of an electric current. No known substance will endure this temperature of white heat without, in time, disintegrating, but carbon seems to stand this white heat longer than any other substance especially when it is enclosed in a high vacuum. But all incandescent lamps "fail" after running a certain number of hours, because their filaments disintegrate—they do not burn at the temperature of incandescence. The average life of an incandescent lamp is from six hundred to one thousand hours, after that the filament becomes worthless and must be renewed.

The carbon loop is usually made from some vegetable fiber, such as is obtained from bamboo or some plant possessing a similar structure. Silk is used by some manufacturers but as yet has not proved to give as good results as bamboo. As the object is to obtain a compact carbon, a fiber rich in this element is the best. It must have a straight grain and possess great tensile strength in order to endure the process of reducing its size to the

required proportions. This process consists of shaving or drawing it through a series of dies, each die removing a small portion of the surface until the proper diameter is obtained. This diameter is varied according to the candle-power and voltage of the lamp. Having brought the fiber to the proper size, they it isbaked or carbonized by a method similar to gas making, except that the residue is the article particularly desired, and not the gases that are driven off. The fiber is now bent around a graphite block so as to form a loop, a number of fibers being put on each block, which are then packed in a pot containing carbon dust and subject to the intense heat of a furnace for a number of hours.

During this process air must be excluded from the pot containing the fibers, otherwise a certain portion of their structure will be burned. Having properly carbonized the fiber it is attached to the wires (*w w* Fig. 1,) which have previously been fused into the glass (*s*); this is now enclosed in the glass bulb and the lamp is now ready to be connected to the mercurial vacuum pump by means of which the bulb is exhausted of air; Fig. 2 shows the Geissler Pump used for this purpose. B 1 and B 2 may be called the mercurial bulbs or reservoirs which are connected by a U shaped bulb, by means of which the mercury is made to flow from one bulb to the other, thereby alternately emptying and filling

each bulb; *p* and *i* are the stop cocks, *v* is the valve opening upward, *c* is the valve opening downward, *d* is a reservoir containing substance for absorbing any moisture that may be contained in

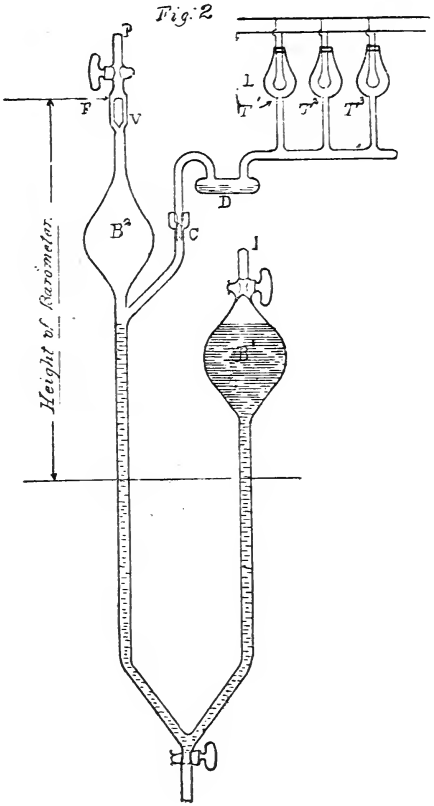

the pumps; *t t t* are the points where the bulbs are sealed when the lamps are detached from the vacuum pump. In this pump the mercury is forced by the pressure of air from the bulb B 1 to

the bulb B 2, driving out the air at the point *p*. The stop cock *p* is then closed and the vacuum pump draws the air out of the bulb B 1, causing

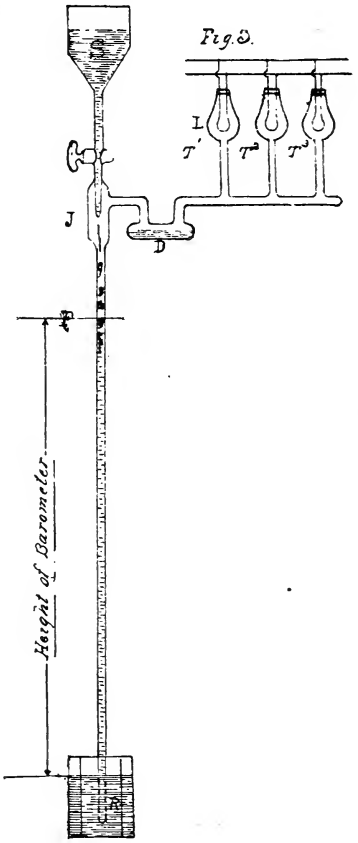

the mercury to fall from the bulb B 2 into the bulb B 1. The air in the lamps then distributes itself through the tubes into the bulb B 2 and is again forced out in the manner described, and so on

until a nearly perfect vacuum is obtained in the lamps. Fig. 3 shows the Spreugel type of mercurial vacuum pump.

In this system the mercury is made to fall from the tube *j* in a very fine stream in the form of small globules, thereby entangling the air in the globules and carrying it off into the reservoir *r*.

One of the most recent improved methods of obtaining a high vacuum for incandescent lamps is by the Packard Vacuum Pump and the following description and illustrations were kindly furnished for this book by the Electrical Engineer of New York.

While the mercury pump leaves nothing to be desired as a method of obtaining a high vacuum, its employment in completely exhausting vacuum lamps is tedious and expensive. In order, therefore, to expedite and cheapen this important part of lamp manufacture, mechanical vacuum pumps are now extensively employed to remove the larger part of the air contained in the lamps, leaving the mercury pumps to complete the vacuum required. Probably the most extensively used vacuum pump for this class of work is the Packard Vacuum Pump, built by Mr. Norman Hubbard, of 93 Pearl Street, Brooklyn, N. Y. Our engraving, Fig. 4 shows the No. 4 pump, and as will be seen, the cylinders are placed vertically in a cast-iron box which serves as a bed plate and water jacket, and on which the

frame and working parts are mounted. Each cylinder is entirely independent of the others and can be used separately or connected up as required.

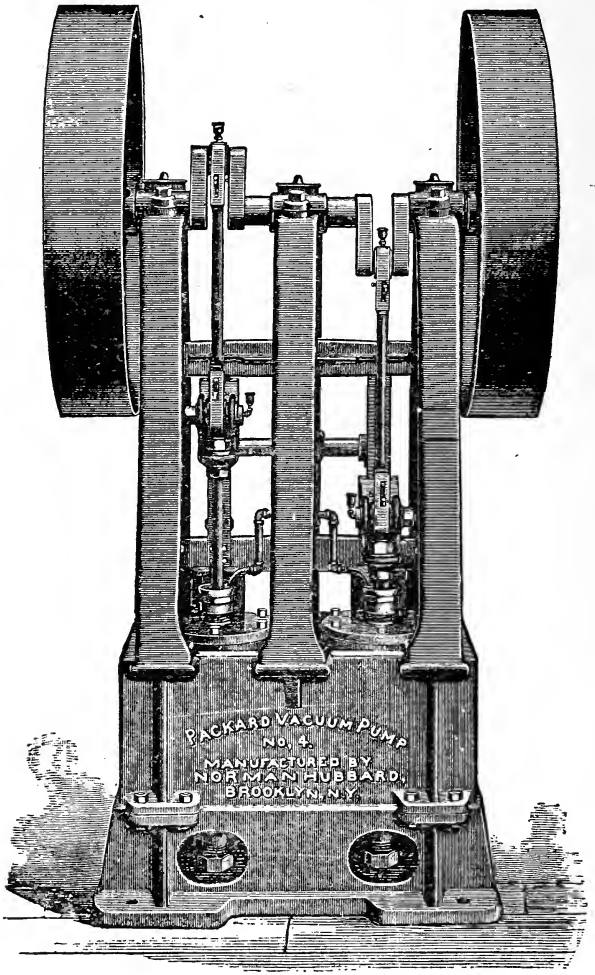

FIG. 4.—THE PACKARD VACUUM PUMP FOR EXHAUSTING INCANDESCENT LAMPS.

The suction pipes are connected at the bottom of the jacket by means of ground unions which are

provided with traps to arrest any mercury or dirt, and the exhausts are piped to a pot which acts as a trap to catch the oil used in lubricating the cylinders, which is saved and may be used over again. No water is used in the cylinders.

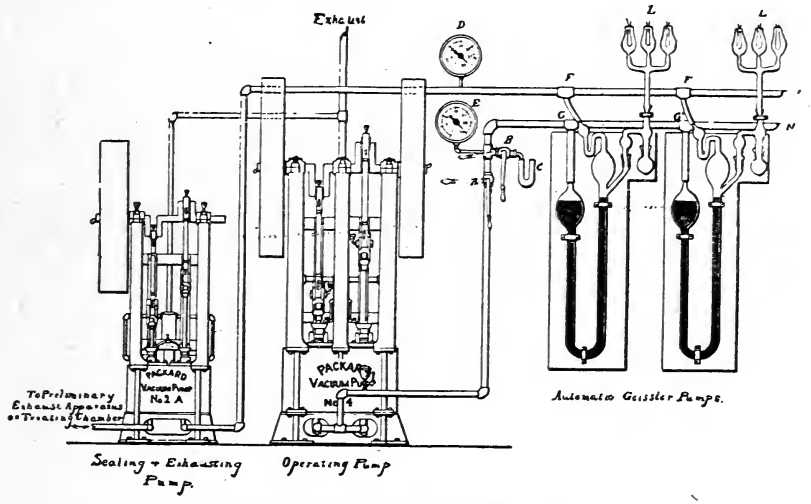

FIG. 5—THE PACKARD VACUUM PUMP FOR EXHAUSTING INCANDESCENT LAMPS.

The valve motion is on the principle of the well-known Ritchie valve gear, but containing none of its complication. All the valves are opened and closed automatically, not requiring an air pressure below them to do this work. The main valve stem does not pass through the piston head. The clearance in the cylinders is reduced to a minimum, being generally less than $\frac{1}{16}$ of an inch, and no liquid is used other than sufficient oil to insure proper lubrication.

The valves in the piston head have their seats close to the bottom, and are entirely enclosed in the body of the piston, rendering impossible the breakage or giving out of the valve. The exhaust valves are contained in a separate bonnet bolted to the cylinder head. This bonnet has a screwed cover, by removing which the valves can be lifted out.

The company claim that (the barometer being at 30 inches) a vacuum exceeding 29½ inches is easily obtained.

The Packard pumps are built in a variety of sizes, the smaller ones being designed for the preliminary exhaustion of the lamps. The larger sizes are designed for the operation of the ordinary automatic Geissler pumps, where the mercury is raised and lowered by alternately admitting the atmospheric pressure and producing a vacuum above the mercury in the lower bulb. The method of connection of the Packard pump with the mercury pump is shown in Fig. 5.

CHAPTER XII.

ELECTRICAL MINING APPARATUS.

THE field that electricity is destined to achieve great industrial victories is in the mines of the world. Here, it is now being used for profitable service under conditions where heretofore no agency could find place for action. Rich deposits of metal or mineral, inaccessible to development from the difficulty of access, the absence of fuel, or the excessive cost of the same, are now capable of a profitable working; and are being rapidly occupied. Natural energy in the myriad water powers of the country, that for ages have run to waste, often in localities where they could not be utilized, now take up their yoke of submission, and one to twenty miles away from the falls, give ample, reliable, economical service for mill and mine. In the pages that follow, will be shown some of the applications of electrical energy for mining uses, and its adaptation to every class of mining work.

Nature has generally interposed very serious obstacles in all mining operations. In many rich mining localities fuel is scarce and transportation very high, so that the use of steam power is unprofit-

able. If water power is in the vicinity, intervening mountains or other obstacles are often in the way, and expensive canals, tunneling or insurmountable grades prevent its transmission. In the past the lack of a practical and economical method for long distance transmission of power, ensuring efficiency and commercial success, has led to the abandonment of many mines of great promise, especially in the West and South. Of course the difficulties of all the systems of power transmission increase rapidly with the distance, and in mining especially—from the nature of the work—distance from the source of power is an ever-increasing factor. Of the five prominent systems of importance, suitable for long distance transmission, namely: hydraulic, pneumatic, steam wire rope and electric, the latter is the only one that at the distance of a thousand feet, or further increase of the same, can, in any degree, economically meet the emergency. Electric transmission of Power means an *air line* from point to point. There are but few places where water levels can be run over light grades and in a direct course. In the majority of cases canal courses are circuitous and grades difficult and expensive in the construction. So that compared even with the cheapest methods of water or wire rope transmission, the direct wire system of electric transmission of power has immense economical advantages, to say nothing of the great

superiority in its delivery and application to the mining work at the mine or mill. Any reliable constant water power, with the usual obstacles in mining districts, can better, by a very large percentage, be *electrically* transmitted than by any other method whatever. For at least twenty miles distance it is possible to transmit electrical energy, and distribute the same successfully in detail under the most difficult conditions, and for the most protracted and exacting service.

Edison Electric Mining Hoist.—On page 212 is a view of the Edison Electric Mining Hoist. The general arrangement of the two different parts can be understood very easily from the view given. Direct gearing between the armature and drum is used, and all gears are boxed in iron cases to protect them from dust or stray stones. At the same time the cases can be quickly removed if occasion should require to reach the working parts. Every part of the machine is designed to give the greatest power with the least weight, and by this means the machine is made quite light and can be easily transported from one part of the mine premises to another.

The qualities of durability, compactness, ease of operation and minimum of wear, so essential in mining work, have been carefully attended to in this machine. The view presented shows that no extra room is taken up by any part of the apparatus. Everything is arranged to fit closely upon the base

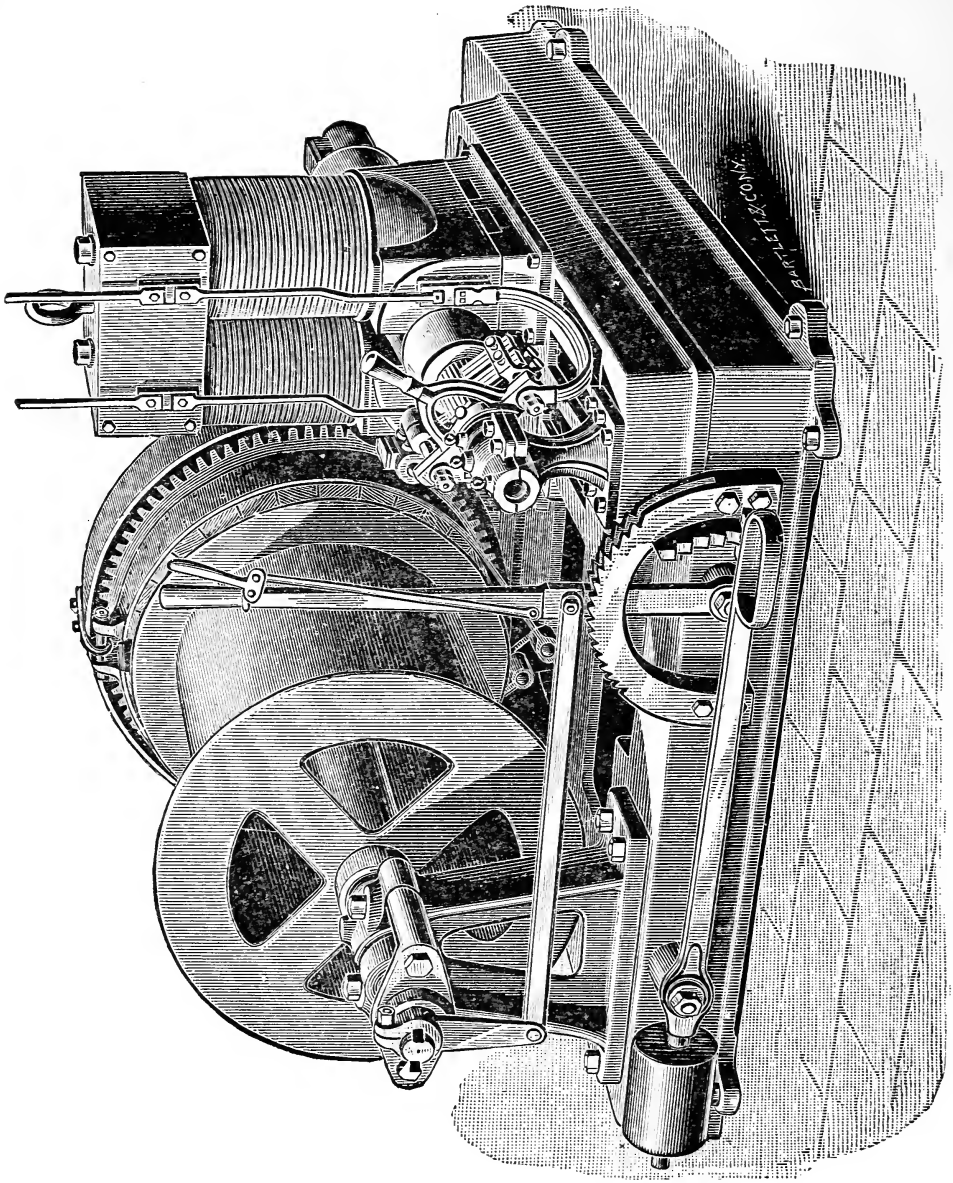

EDISON ELECTRIC MINING HOIST.

frame of the hoist. The speed of the motor is controlled by a switch at one side, by means of which the motor can be made to vary its speed by a single movement of the switch handle. Turning the handle to one division will make the motor run slowly, through two divisions, faster, and full number of divisions, at full speed, while turning the handle in the opposite direction, will give similar rates of speed with opposite direction of motion. This electric hoist is supplying a long felt want in mining and mill work, where a convenient and portable hoist which can be operated from a lighting circuit already installed, has been needed.

Rotary Diamond Drill—In all mining machinery with the exception of the rock drill, applications of the Edison motors are made by gear or pulley. They now have ready for the market a rotary diamond drill, which has shown very good results in experimental work, and will soon be applied to regular mining work in several leading mines. A good electric rotary mining drill has been the missing link in electric applications for mining work. This one is light, compact, simple and easy to operate. The motor is completely encased, so that it is impossible for dust, dirt or stray stones, to lodge in the working parts. The whole drill is mounted on an adjustable frame so that it can be very easily set in any position desired, or set at work at any part of the mine.

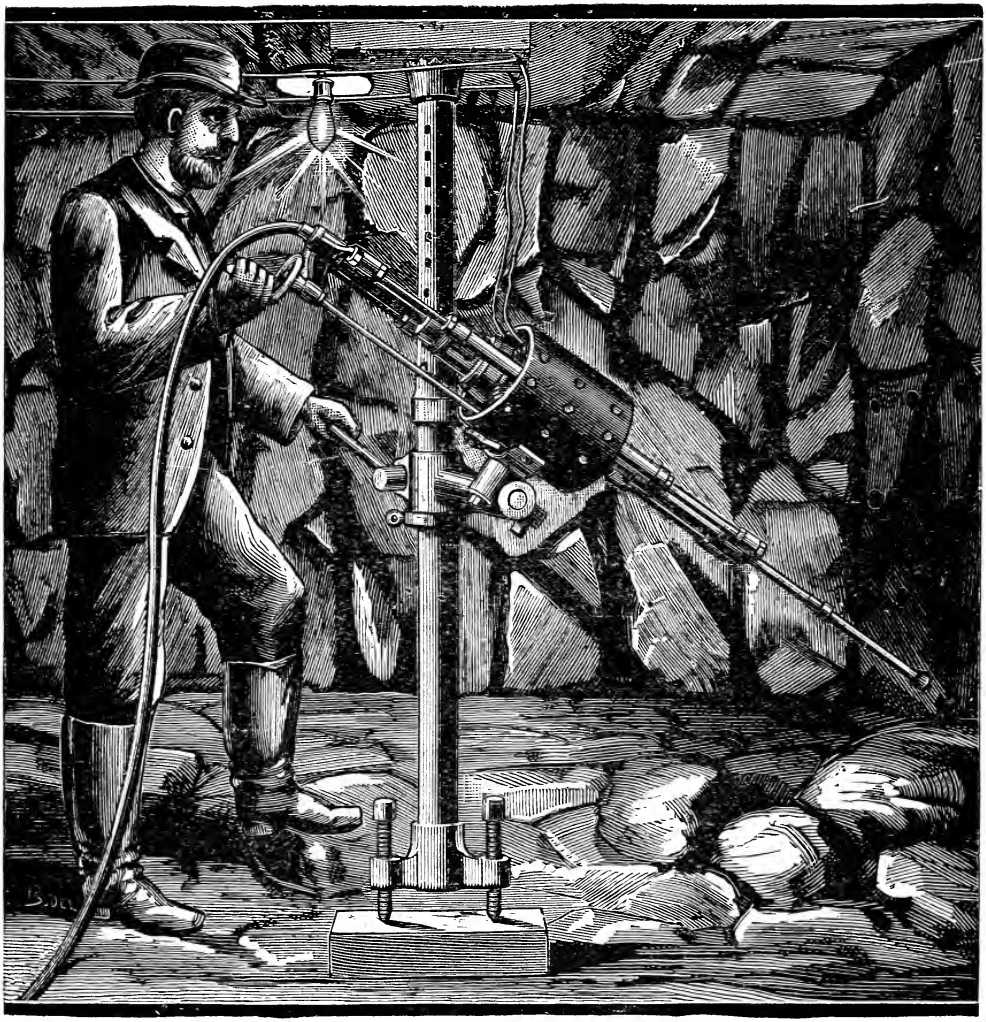

ROTARY DIAMOND DRILL.

The current for operating the drill is supplied at a constant voltage or potential; the number of volts depending on the potential used for transmitting power throughout the mine. If lamps are needed, they can be supplied with current from the same main current wires which supply current to the drill, and when in such use are connected in multiple arc across the main wires.

Edison Locomotive for Metal Mines.—It has not been so difficult a problem to adapt electric motor service in the tramways of coal mines as in those of metal mining, where great compactness, strength and traction for the space that can be occupied are required. To get the needed energy into the required limited space has been the most difficult problem of solution. In the Edison locomotive for metal mines it is claimed that these necessary conditions have been secured. The outside dimensions of a 15 H. P. locomotive for an 18 inch gauge are 30 inches in width, 30 inches in height, 62 inches in length. We illustrate the locomotive which shows a machine of a total weight of from 3,000 to 4,000 pounds. Such machines can be used in a space where even a mule could not be worked. This electric locomotive is simple, powerful and compact, and is built with special reference to the arduous duties required of such a machine. The gauge is 18 inches, but it can be accommodated to any gauge used in ordinary mining work. In order

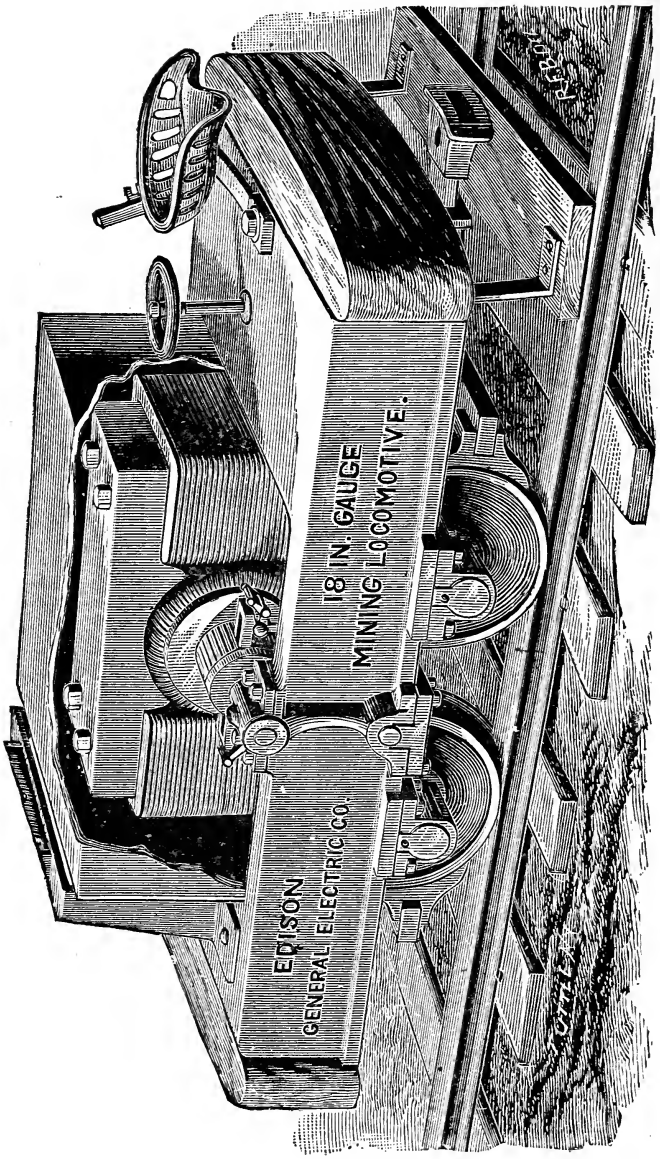

EDISON ELECTRIC LOCOMOTIVE FOR METAL MINES.

to protect the machine from damage, all the working parts are completely boxed in, as shown in the cut.

The speed of the motor is under complete control by a switch which throws the winding of the field into different electrical combinations, thus varying the speed of the motor without the use of any wasteful resistance. The direction of rotation is also governed by the same switch, so that the operation of the motor is very simple, and it can be put in charge of an ordinary workman. Any system of conveying the current from the dynamo to the locomotive can be used, either using the rails as one side of the circuit for the return of the current, or else employing a complete metallic circuit by the use of a double overhead trolley wire. In these cases, a trolley pole, shown in the view, carrying at its upper end trolley wheels for making running contact with the overhead wires, is attached on the rear of the locomotive car. This mining locomotive is now being manufactured by the Edison Electric Railway and Motor Company.

The Edison Electric Coal Cutter.— The great superiorty of mining coal by machinery instead of hand has developed a number of coal cutting machines, among others what are known as the "Rotary Coal Cutter," "The Reciprocating Coal Cutter," and the "Cutter Bar." This new feature in mining machinery is of great value to the coal mine industry,

because of its great saving of labor and expense. By its use, also, it is possible to have the working places more concentrated, and thereby saves a large amount of expense in the form of dead work, such as keeping open gangways, etc. To get an approximate idea of the cost of mining coal by machinery as compared with hand labor, it can be stated that a cutter in the Hocking Valley is capable of giving an output of 80 to 85 tons a day, at a cost of 43 cents per ton; the same work done by hand would cost 70 cents per ton.

The Edison General Electric Company have added to their extensive list of mine appliances the most approved form of coal cutter, namely, the one using the cutter bar—see illustration page 219. This machine has a shaft revolving parallel with the coal in a horizontal plain, with knives distributing all around the surface, so as to cut a groove in the coal the entire length of the bar. This machine has the advantage of great strength, and excels all others of the same class in the matter of design, the material being distributed to give the greatest possible strength and rigidity. A great feature of this machine is that the coal is cut in an upward direction which greatly assists in keeping the machine down to the ground, and avoids the necessity of carefully fastening it by means of braces or jacks. A draw back which has been experienced in several types of coal cutters is that by the arrangement of

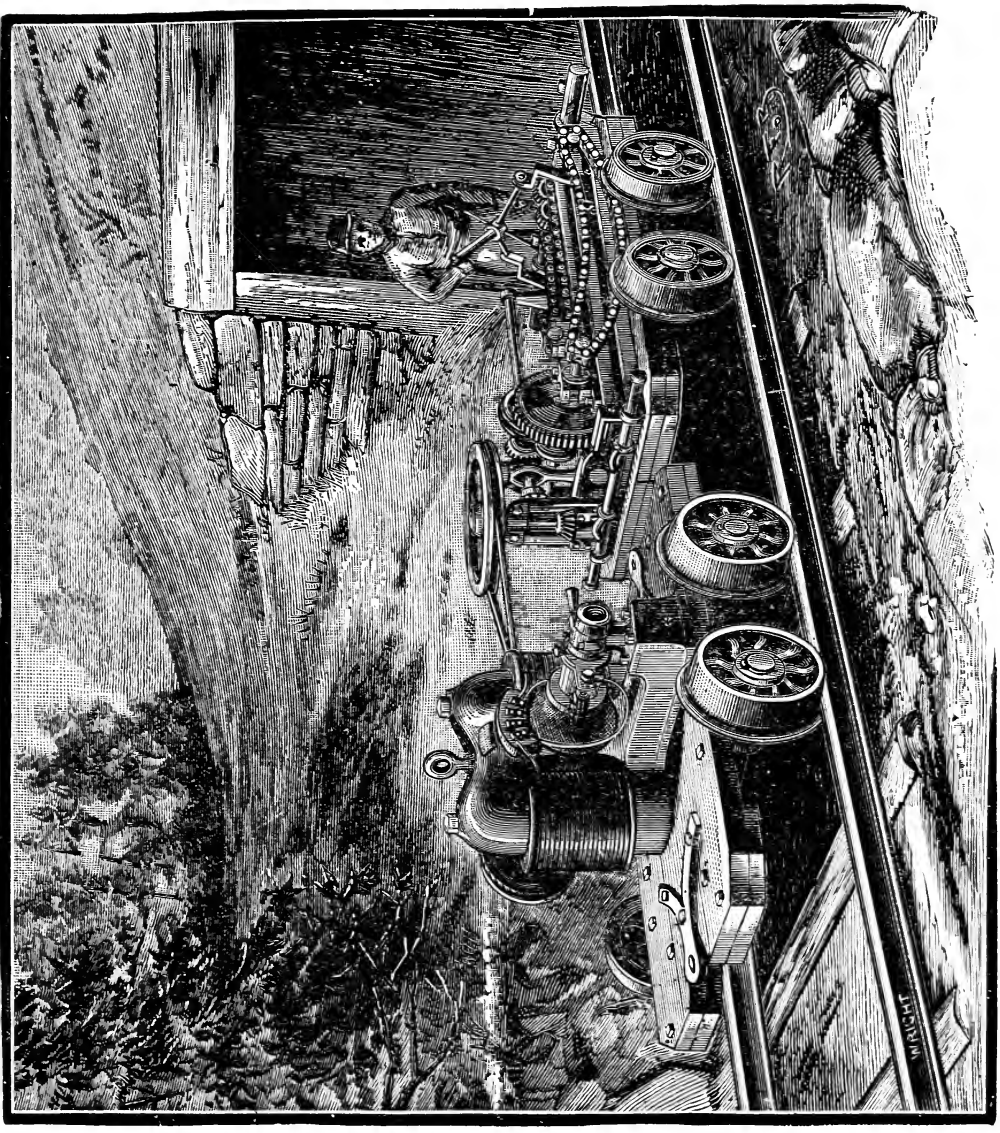

EDISON ELECTRIC COAL CUTTER.

the bearings which hold the cutter bar, the bar has to withstand not only the strain due to the resistance of the coal being cut, but also that which the chain itself has to overcome.

In the Edison Machine a counter shaft is placed behind the cutter bar to which the power is transmitted direct from the motor by means of four

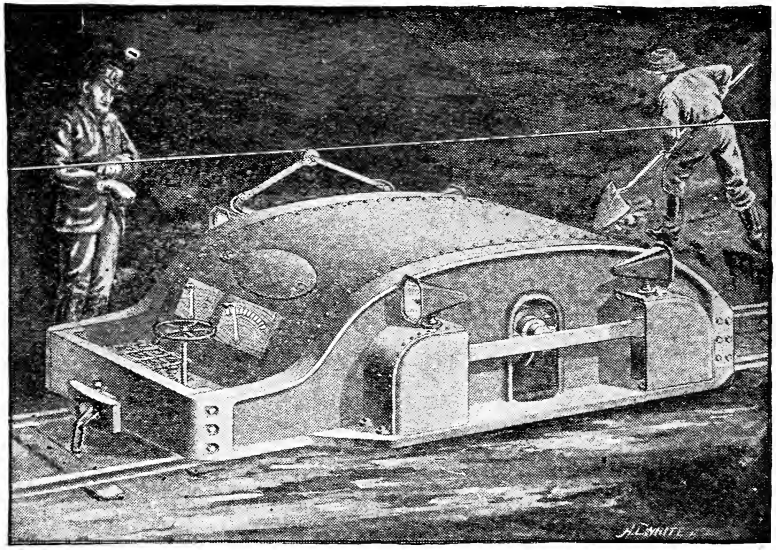

THOMSON-VAN DEPOELE MINING LOCOMOTIVE.

chains. The power is then transmitted to the bar by means of gears, so protected as to prevent the coal dust from settling between them. The machine is especially adapted to withstand the rough uses to which it is subjected in mines, and it enjoys the advantage of simplicity in design, great strength

in the bar actually doing work, and the use of rollers for the sliding frame which reduces to a minimum the friction between it and the stationary bed.

The motor is capable of giving 15 H. P. when doing steady work; when running off and on only it is capable of giving a far greater power. The motor runs without sparking, and has all of its vital parts well protected, the insulation of the machine having been given special attention.

This coal cutter is capable of making a cut of 4 feet wide, 5 feet 6 inches deep, by 3½ feet high and can be operated by two men; it can be moved from place to place, and the great flexibility of the of the electric current enables the miner to work in places where it has heretofore been impracticable to transmit other forms of power for the operation of these machines.

The Thomson-Van Depoele Mine Locomotive.—The general appearance of the Thomson-Van Depoele locomotive is shown in illustration. on page 220. The No. 4 machine, with a capacity of 60 horse-power, has a total height from top of rail of 39 inches. The controlling devices are all at one end, and the body of the locomotive being so low that the view is unobstructed in either direction, the operator need not change his position in reversing the motion of the locomotive. Two Electric Parabolic Reflectors are provided at each end, making the track clearly visible for long distances.

The trolley is of the double-elbow pattern, found so admirably suited to mine work in previous installations. It accommodates itself to the varying heights of the trolley wire within any reasonable range. The sheet-iron covering makes a complete water-tight armor, protecting the moving parts from danger of falling rocks or bodies of ore and coal. The illustration shows the locomotive in an enlarged chamber, but about to enter a tunnel whose height from top of rail is scarcely four feet, hence the depression of the trolley wire as shown.

Many other electrical machines have been invented for mining purposes, but the space allotted for this chapter will not permit the author to describe them; so let us proceed to the next subject.

CHAPTER XIII.

THE MODERN ELECTRIC RAILWAY.

In 1879 Dr. Siemens constructed and exhibited at Berlin the first Electric Railway. Previous experiments had been tried by him in 1867, but without success.

In 1880 Stephen D. Field filed papers at the Patent Office in Washington, D. C., for a patent on the Application of the Electric Motor to the Street Railway. Papers were also filed the same year by Dr. Werner Siemens and Thomas A. Edison. The first Electric Railroad put into operation in the United States was constructed and exhibited by Thomas A. Edison at Menlo Park, N. J., in 1880. The Chicago Electric Railway was the first constructed in this country for business purposes and was considered at that time a success. This was operated by the Van Depoele system. But all this was a beginning, and not till 1886, when the Sprague System was established by the construction of the Richmond Passenger Railway at Richmond, Va., and put into operation in 1887, can it be said that we had a modern electric railway. This was followed by the construction

of the first Thomson-Houston Electric Railroad at Crescent Beach, Mass., July 1st, 1888.

That the Electric Railroad is a success and that it has come to stay no one can have a doubt. Of the future developments, well, who can tell? No doubt but electricity is in its infancy and that within a few years it will make still greater strides, that we may yet not only see the street cars run by electricity, but also the steam railway, which means no smoke, no cinders and faster travel.

There are two principal systems of Electric Railways at present; the overhead system and the storage battery system. In the former system, as in the Edison and Thomson-Houston, the cars are equipped with motors and the current taken from the overhead wire by means of a small structure on top of the car. This consists of a light trolley pole, supported upon a stout spring, so that it may move in any direction, and having at its upper end a grooved metal wheel, making a running flexible contact on the under-side of the working conductor. The flexibility of this arrangement is very great, it being able to follow with facility variations of the trolley-wire four or five feet in either a horizontal direction, or more than twelve feet in a vertical direction. By this means a constant contact is made by the trolley-wheel at different rates of speed or around curves, and for different heights of the trolley-wire. The current

taken from trolley-wire passes through the motor, through the wheels of the car to track, back to the dynamo. The rails being grounded and usually connected to a continuous conductor running the whole length of the line. See Fig. 1.

In order to secure the necessary track adhesion by means of independent driving, and to permit the entire weight of the car and its contents to be available for traction, two motors are generally used on each car, one for each axle, with independent driving; at the same time both motors are capable of perfectly simultaneous control by a switch placed at either end of the car. This switch controls both the speed and the direction of movement of the motors. These motors are of 7½ or 15 horse-power normal capacity each, making an aggregate of 15 or 30 horse-power on each car.

In the Thomson-Houston system the regulation of speed and current is governed by a Rheostat, which is an apparatus made up of mica and sheet iron, and is used to throw a variable resistance into a circuit at will.

In the construction of the electric motor for car propulsion the motor acts simply for the transformation of electrical energy with mechanical energy. A current of electricity is sent through the armature and fields of the motor, which causes the armature to revolve.

Another, and by no means the least part of the

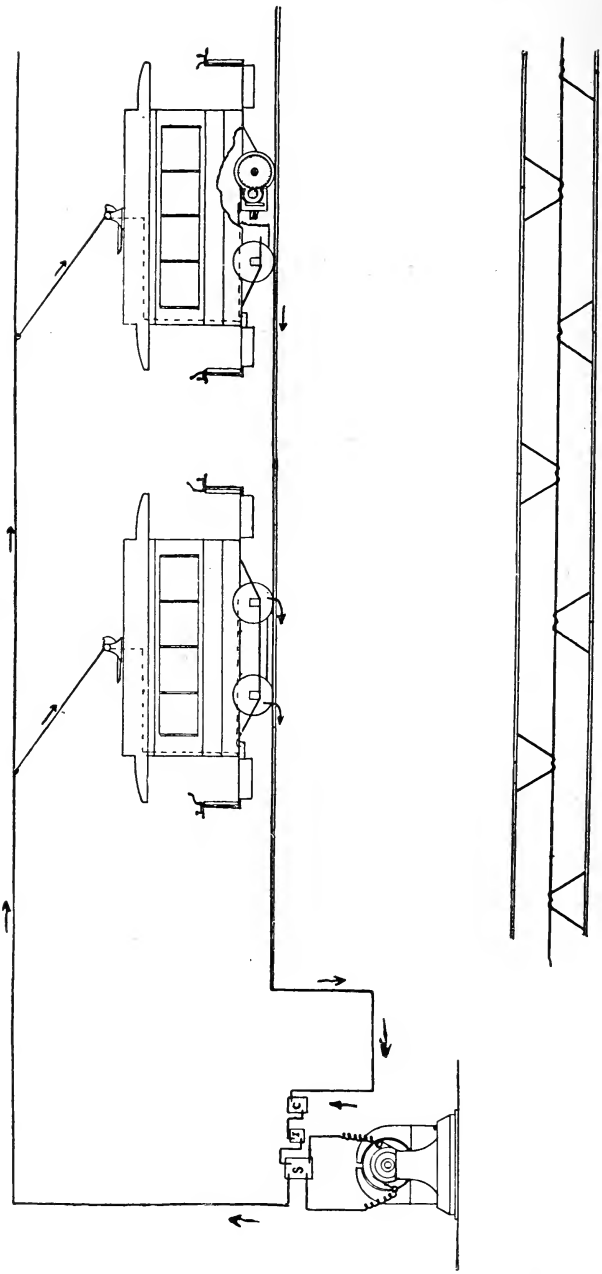

FIGURE 1.

electric railway is the power station, which contains the boilers, steam engines and electrical apparatuses. Engines are now made especially to drive dynamos, as it requires a uniform speed to obtain good results from a dynamo.

The electrical apparatus consists of dynamos for generating the current, switch-boards, armatures and volt-meters. The feeder, or connection board, interposed with fuses, which melt and break the current if it exceeds a certain amount; an automatic circuit breaker; also an apparatus known as a lightning arrester, used in case the cars or line are struck by lightning.

There is at present two classes of electric railway motors, fast speed and slow speed. With the fast-speed motor the armature revolves with great rapidity, and the motion is communicated to the axle of the car by means of gears and pinions. In the slow-speed motors the intermediate gears and pinions are left out, there being only one gear and pinion, the gear being on the axle of the car and the pinion on the shaft of the motor. At present, electricians are working to obtain a gearless motor whereby the motion may be communicated directly from the armature shalt to the axle of the car.

The General Electric Co.'s 54 Railway Motor.—The rapid growth of passenger traffic resulting in

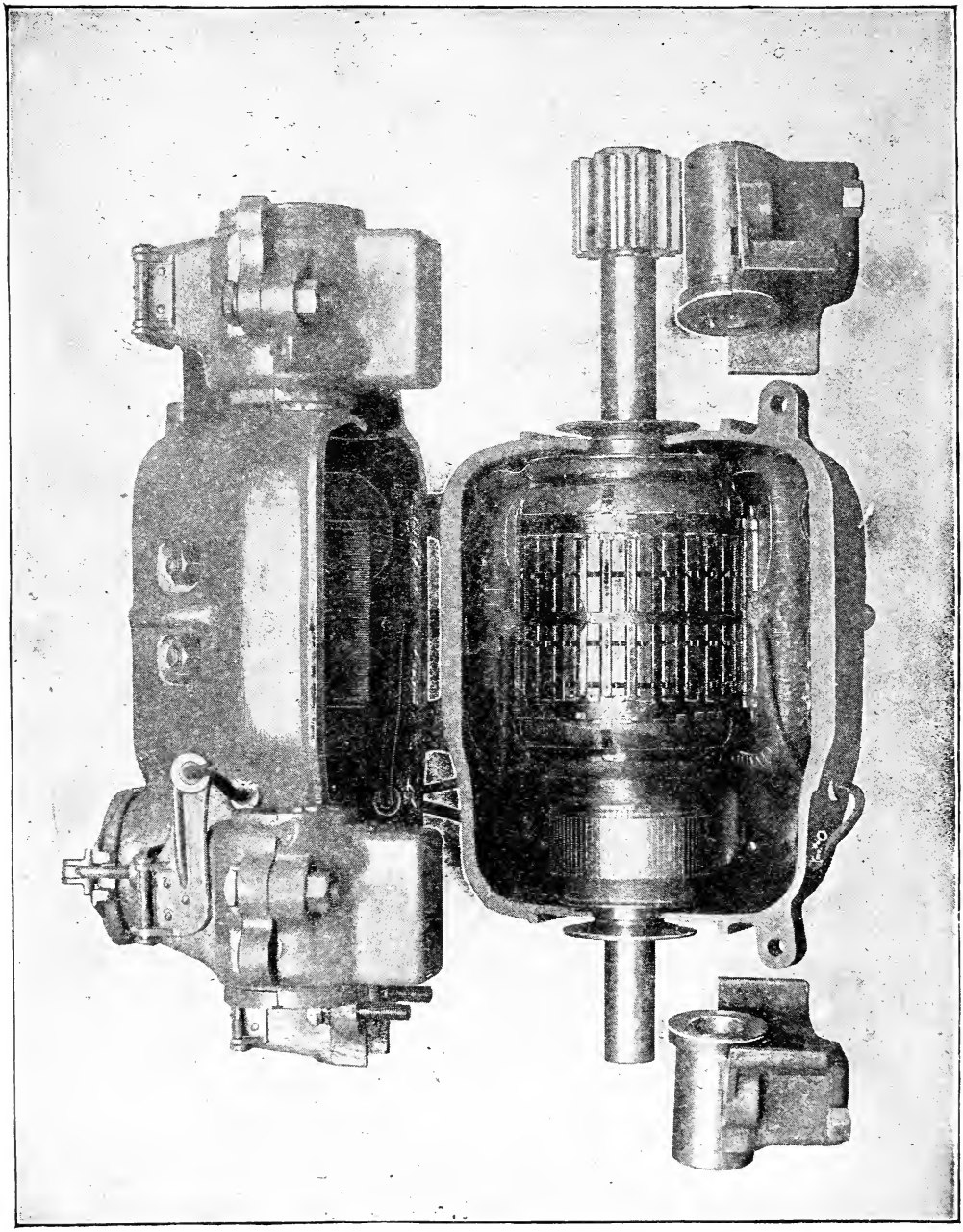

LOWER FRAME DROPPED — SHOWING ARMATURE READY FOR REMOVAL.

the increasing use of heavy cars on the lines of many of the electric roads operating within city limits has induced the General Electric Company to design and manufacture a motor known as the GE–54.

It is adapted for use on a minimum gauge of 48⅝″ and in general design and construction is similar to the GE–52.

Rating.—On 500 volt circuits the GE–54 railway motor with three-turn armature will develop 25 H.P. The output is based on the standard rating ; that is, a maximum rise of 75° C. in the temperature of this winding after a run of one hour at full rated load, the temperature of the surrounding air not exceeding 25° C.

Magnet Frame.—The magnet frame is in the form of a hexagon with well rounded corners, and is cast in two pieces of soft steel of high magnetic permeability. The two castings are bolted together, but the front bolts are hinged in order that the lower frame may be swung down conveniently so as to permit inspection or repairs of the field or armature.

There is an opening in the frame just over the commutator large enough to provide for the removal of the brush holders and brush-holder yoke and also to permit of inspection of the commutator and brush holders. The cover, which is of

malleable iron, is held in place by an adjustable cam locking device, and can be readily removed when necessary. The lower frame has a small opening directly under the commutator, also protected by a suitable cover.

Bearings.—The armature and axle bearings consist of cast-iron shells of ample thickness to insure stiffness, and are lined with Babbitt metal swaged into the shells so as to make them compact and tight.

The bearings are designed for the use of both oil and grease. The oil is fed to the shaft from oil wells in the caps by means of felt wicks, while the grease reaches the bearing from the grease box which is over each bearing, through a slotted opening in the top of the lining.

The armature bearings, which are built on the outboard principle, are $7\frac{3}{4}''$ x $2\frac{3}{4}''$ at the pinion end and $6''$ x $2\frac{1}{2}''$ at the commutator end. The supports for the upper parts of the linings are cast as parts of the upper half of the magnet frame, and a large recess is cored between the inner end of the lining and the frame to accommodate the combined thrust collar and oil guard. The design of the oil guard practically prevents oil or grease from working into the motor frame. The lower half of the armature bearing is supported by a cap bolted to the upper frame, and an opening is pro-

vided to allow free egress of the lubricant after it has passed through the bearing.

The axle-bearing caps are bolted to the under side of extension pieces, which are cast on each end of the upper half of the magnet frame, and which reach over and partly enclose the car axle. These parts are bored out to support and enclose the axle linings, which are 8″ long.

Pole Pieces and Field Coils.—The pole pieces are built up from thin soft iron laminations, riveted together, and bolted to the frame by through bolts with nuts on the outside.

The four field coils are placed at an angle of 45° from the horizontal, and are held in place by pressed steel flanges or spool holders which are clamped to the pole pieces. The coils are made of asbestos, cotton covered wire, and are further insulated with wrappings of varnished cloth and tape. The insulation on the coils is subjected to a high potential test of 4000 volts alternating current.

Armature.—The armature is of the ironclad type, and the core is built up of thin soft iron laminations which are carefully japanned and securely keyed to the shaft. The laminations are clamped at each end by cast-iron heads which are also keyed to the shaft. The core is hollow and is ventilated by the air which enters the pinion

end of the core, and passes out through the air ducts placed at regular intervals among the laminations.

The armature winding is of the series drum type, the number of turns per coil varying with the requirements of each case. The coils are made up in sets; and, before being placed in the slots of the armature core, each set is formed, and thoroughly insulated with specially prepared tape and cloth which have high insulating qualities and are practically impervious to moisture.

The terminals of each coil are brought directly to the commutator segments, and soldered so as to properly connect the coils to each other and at the same time form the connections between the windings and the commutator. They are so arranged that any coil or number of coils can be easily removed and repaired, or replaced with new coils when necessary. The coils are held in place in the slots and on the ends of the core by bands of tinned steel wire held together by clips and soldered. The end windings are thoroughly protected by canvas, and at the pinion end they are further shielded by a flange which extends past the windings and prevents injury from careless handling.

When the coils have been placed on the core and the armature is completed, the insulation

between the winding and the core is subjected to a high potential test of 2500 volts alternating current.

Commutator.—The commutator consists of 115 hard-drawn copper segments which are slotted at the back to receive the armatures wires, insulated with carefully selected mica, and securely clamped to a malleable iron shell. The diameter of the commutator is $8\frac{1}{2}''$, and the wearing length $3\frac{1}{8}''$, with a depth of $1\ \frac{1}{32}''$ measured at the front end. The cone clamping insulations are of the best quality of mica, built up and pressed hard and compact. The mica between the segments is of a softer quality, which insures even wear of segments and mica.

After the commutator is completed, the insulation between the segments and the shell is subjected to a high potential test of 4000 volts, and that between adjacent segments, to 400 volts alternating current.

Brush Holders.—The two brush holders are of cast brass, and are clamped to a hardwood yoke which is bolted to the top of the magnet frame, and can be removed through the opening in the frame over the commutator. The brushes slide in finished ways, and are pressed against the commutator by pressure fingers, which give a practically uniform pressure throughout the working range of the brushes.

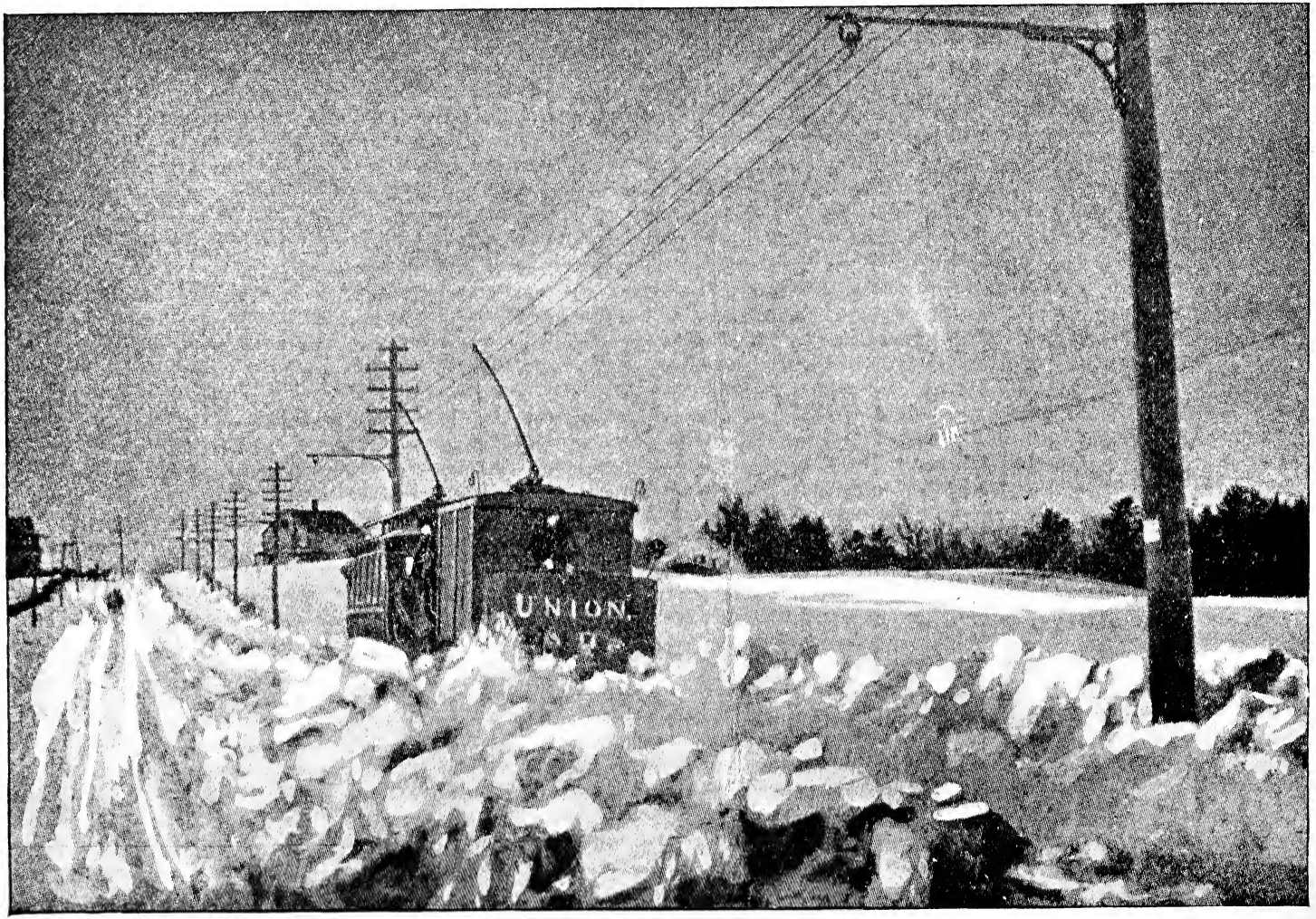

THOMSON-HOUSTON ELECTRIC SNOW PLOW.

All leads from the motor to the cable are brought out at the front of the motor through rubber bushed holes in the magnet frame.

Gearing.—The pinion is of steel, and is bored to a taper fit on the shaft. The gear also is of steel, and gear and pinion have a $4\frac{1}{2}''$ face and No. 3 pitch. They are protected by a dust-proof case of malleable iron which is securely bolted to the upper half of the magnet frame.

Suspension.—The GE–54 motor is adapted for use with either nose or yoke suspension. Four bolts are provided at the front of the motor for attaching the suspension bar,

When the motor is mounted on 33 wheels, the clearance between the bottom of the motor and the top of the rails is $5\frac{7}{8}''$, and that between the bottom of the gear case and the top of rails, with the maximum gear reduction is $4\frac{5}{8}''$.

A Trolley Man-of-War.—The accompanying illustration shows a trolley man-of-war, built in the shops of the Fitchburg & Leominster Street Railway Company, at Fitchburg, Mass. This pioneer of all land craft is not to be despised when it comes to a question of force. Dainty "barkers" peep out through her port-holes, prototypes of the smiling faces that gleam from the sides of the flagship New York. This trolley man-of-war, or white cruiser on wheels, has been dignified with the

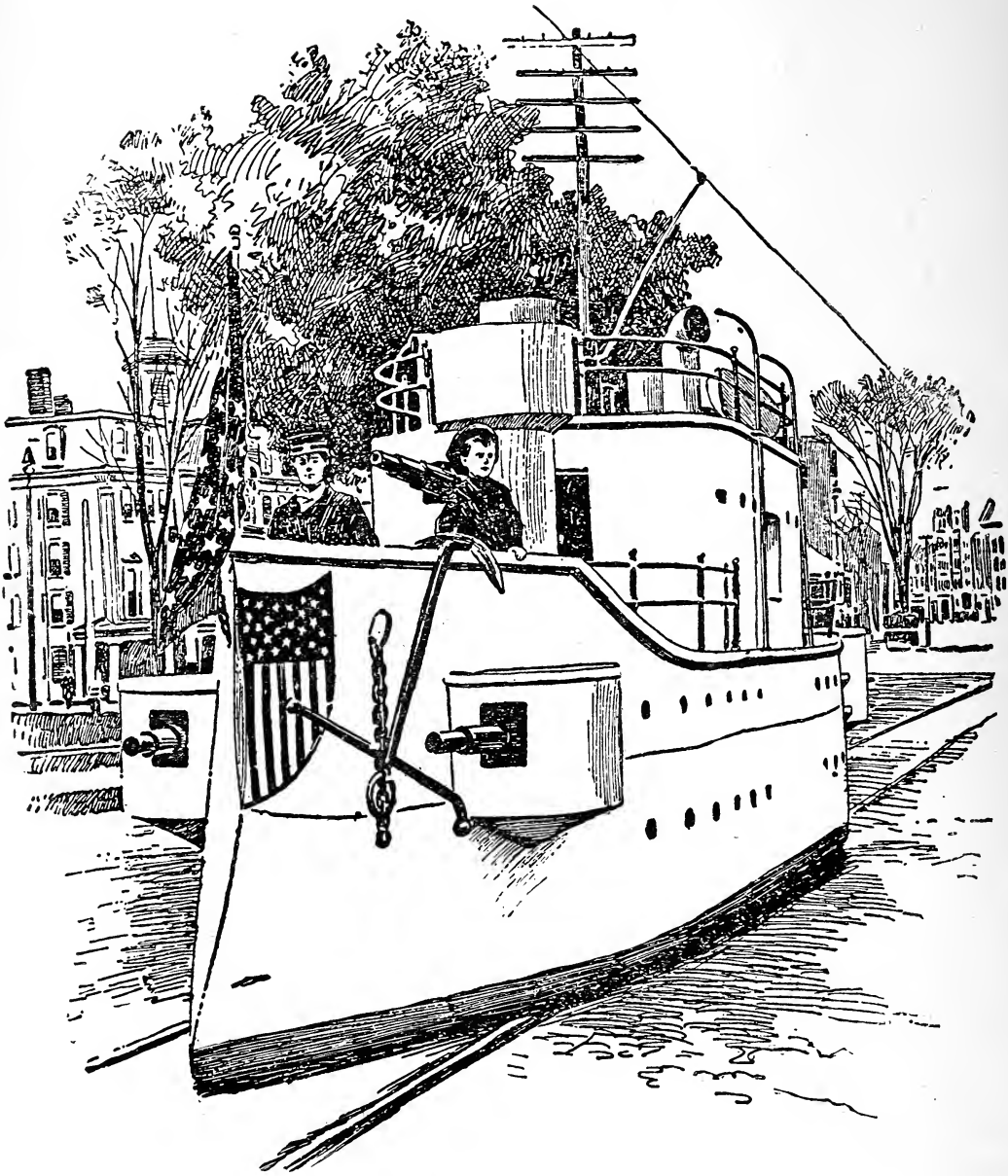

A TROLLEY MAN-OF-WAR.

name of President-elect William McKinley. While her mission is that of protection, so far, she is quite likely to be utilized for that purpose in the days that are to come.

The McKinley is designed to run on electric roads of standard gauge, and it is very likely that the queer craft will have many imitations before long. She is in appearance a miniature, to a great extent, of the big cruisers that have followed Admiral Bunce's flag for so many months. Her superstructure is painted green, her hull and sponsons white, her guns and ironwork black. She carries 100 men, officers and crew; and is 37 feet long, 9 feet wide, 12 feet high. The lines on which she was constructed were taken from the model of the battle-ship "Brooklyn," by Naval Architect Henry P. Lapointe.

Originally the McKinley was a flat car; and she was extended fore and aft, so that finally her length from stem to stern was 37 feet. She has a double row of port-holes on each side; and as she advances toward you, you see the sullen countenance of two grim six-pounders, while peeping from the tiny turret on the gun-deck is a ferocious-looking 18-pounder. The craft is equipped with two 30-horse-power motors.

The builder believes that the McKinley demonstrates the fact that it is possible to construct a

car for operation on street railroads in cities that would be of infinite use in case of riot. It is not beyond the range of the ability of modern mechanics to build a car that would be bullet-proof, and really constitute a travelling fort. Such a car might carry several pieces of artillery, or to be equipped with the light guns that are used in the navy, the recoil of which would not be sufficient to damage the fort on wheels in any way.

Indeed, it is believed that a car constructed on the same model as the McKinley, only, of course, of substantial material, would form a very effective protection for a company of men whom it was necessary to move from one part of the city to another. Certainly it would be very much easier to transport guns and men in this fashion, in case of riot, than in the ordinary way; and it is also true that movements could be made from one point to another with far greater celerity.—*Elec. Review.*

The Storage Battery Car System.—In this system the power is furnished by storage-battery cells or accumulators. These cells are stored when in use under the seats of the cars. The batteries, when fully charged, are capable of propelling an ordinary carload of fifty passengers, over a level road, at the rate of nine or ten miles an hour, for about six hours, allowing for the average car-stops

and lay-offs at the terminals. The car would, therefore, require one change of batteries for a day's run of twelve hours. The weight of a 16-foot car, equipped with two motors, is about $3\frac{1}{2}$ tons, without passengers. The batteries supply electric light for inside lamps and head-lights, and power for signal bells and alarm gongs.

An accumulator car can ascend steeper grades, and go at a faster rate of speed, either on grades or on a level road, than is possible with horses; but always, of course, with a correspondingly greater expenditure of energy. In cases of a single excessive grade on an otherwise level road, it may be advisable, on the score of economy, not to provide power for each car sufficient for surmounting such grade, but to use an auxiliary motor car, or tow-horse, as is now customary.

CHAPTER XIV.

WIRELESS TELEGRAPHY.

The wireless telegraphy apparatus is operated by the effect of Hertzian waves. The waves were named from Dr. Hertz, who devoted a great deal of time to the elucidation of their properties. The waves vibrate at the rate of about two hundred and thirty millions per second. They are longer than light waves, but do not undulate so rapidly as those of heat. They may be produced by a sudden discharge of electricity from an induction coil, Leyden jar, Wimshurst Machine, a flash of lightning, etc. In order that we may see their effect they must be received with some sort of apparatus capable of the same rate of vibration, or in time with them. This apparatus is called the *Coherer*. Messages can be sent much farther over water than land by wireless telegraphy,—from 150 to 200 miles.

The Marconi system seems to be the best at present, and we will give a brief description of the apparatus.

The Coherer.—If a glass tube containing iron filings, and furnished with projecting wings or

wires, be placed in the path of Hertzian waves, the filings will assume a symmetrical position. The coherence is quite strong, and the resistance of the filings to a passage of current of electricity is lowered. This is the principle of the coherer. Now, if a battery is connected in series with the glass-tube (or coherer) and with an electric bell, sounder, or other apparatus, the ordinary resistance of the filings may be so great as to prevent sufficient current from passing through the coherer to produce any visible effect. But immediately on receiving the force of the Hertzian waves, the filings cohere, and so lower the resistance that the current passes freely, and causes the apparatus to work.

In all wireless telegraphy experiments a system of "tuning" must be employed in order to establish perfect unison between the transmitter and receiving apparatus. This tuning is very essential to the privacy of the message. The transmitter and receiver are so tuned, or syntonized, to each other that no message can be "tapped" or received except by the instrument for which it is intended. The Marconi receiving apparatus has two wings, or "capacities," which are used not only as conductors of Hertzian waves to the coherer, but as tuning accessories; without these the receiver would not respond so rapidly or accurately.

The Receiver.—A simple receiver can be made by using a common telegraph sounder or even an electric bell. In the path between the sounder (or bell) and the battery place the coherer. The coherer in its ordinary state presents so much resistance to the battery current that sounder or bell will not work. But if the coherer is put in tune with the transmitter, which is to emit the Hertzian waves when a spark passes between the electrodes of the transmitter, the waves set up by it will break down the resistance of the coherer, and cause the battery current to pass, and operate the sounder or bell.

A difficulty to overcome is, unless some means be employed to restore the particles in the coherer to their original non-conducting state, the current from the battery will continue to flow through the sounder or bell. We must decohere the filings. For this purpose we have a little rod and hammer arranged in such a manner that when the sounder or bell works it taps against the glass of the coherer, and effects the decoherence of the filings. A diagram of the Marconi original apparatus is given on page 243. By referring to the diagram you will become familiar with the parts and understand its operation.

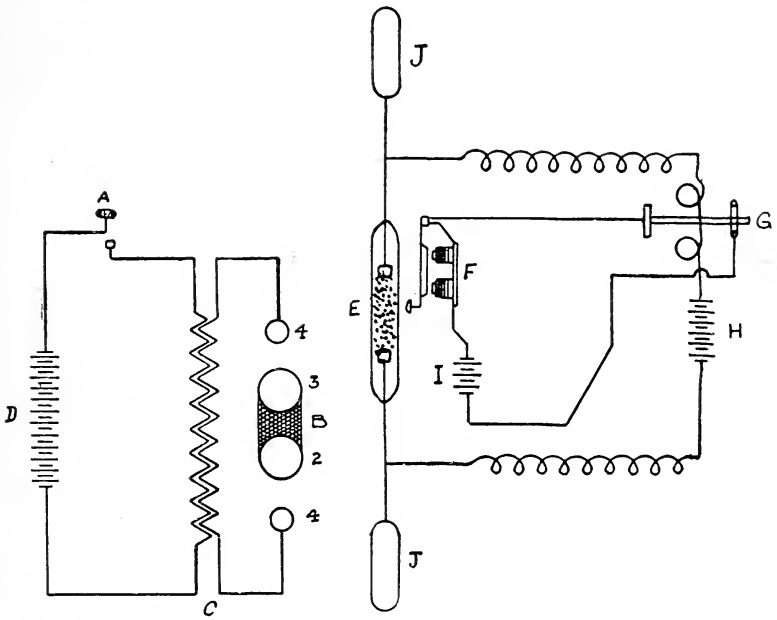

TRANSMITTER. RECEIVER.

Transmitter.

A is the contact breaker.

B is the tube of vaseline oil in which the large brass balls are half immersed.

4–4 are the two small brass balls.

C is the induction coil.

D is the battery.

Receiver.

E is the coherer.

F is the decoherer.

G is the telegraph sounder.
H is the battery which operates the sounder.
I is the battery which operates the decoherer.
J J are the resonators.

The coherer is also connected to the earth and to the sky pole. This pole varies in height, depending upon the distance that a message is to be sent, anywhere from 100 to 350 feet.

In large wireless telegraphy stations eighteen or twenty poles are arranged in a circle. Around the tops of the poles is stretched a wire screen, thoroughly insulated from the poles which receive the Hertzian waves from the transmitter at the sending station. Marconi has just succeeded in establishing wireless telegraphy signals between Cornwall, England, and the coast of New Foundland, a distance of over 1800 miles.

CHAPTER XV.

X–RAYS.

The Röntgen or X-Rays were discovered by Professor Wilhelm Conrad Röntgen. One of the latest theories of these rays is that they emanate from the surface or surfaces that are first impinged upon by the cathode rays which proceed from the negative electrode of the Crookes tube.

The generating surface is often the anode. They are generated by a bombardment of cathode rays against a glass of metallic surface. The metallic surface seems to be the most powerful source, and platinum the best of metals. Hence the use of reflectors in Crookes tubes.

Prof. Crookes was the inventor of this tube, hence the name. They are made in various shapes.

Figs. 1 & 2 show two forms of Crookes tubes.

The Crookes tube is a necessary adjunct to the production of X-Rays. It consists of a thin glass globe or bulb into which is fused through the glass two platinum electrodes, one for the anode and one for the cathode. The anode is the point where the current enters the tube. The cathode is the point

where the current leaves. Hence, either electrode of the tube may be made the cathode by simply reversing the direction of the current. A good tube not more than two inches in diameter, and with the electrodes inside not over an inch apart, with a coil giving a spark one and one-half inches, will make fairly good shadow pictures, if the exposure is long enough. If a larger tube is used the

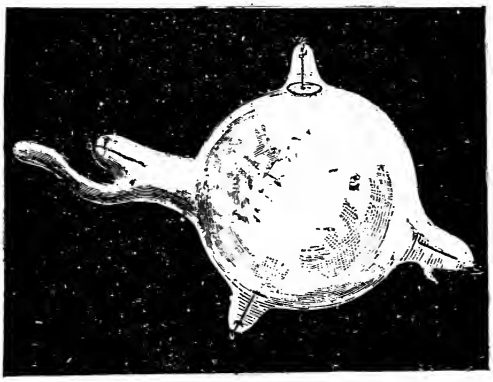

FIGURE I.

coil should give a spark from three to ten inches. By this we mean that the secondary current should jump in the air the distance between the electrodes of the coil the above number of inches. If there is a blue glow that shows in a tube, it will not produce X-Rays. What light there is to be seen should be a green color. The glass bulb is exhausted of nearly all air and gases, making

nearly a perfect vacuum. This vacuum differs from that in an incandescent lamp or a Geissler tube, viz.: It is so complete that only about one-millionth of the original quantity of atmosphere remains in the Crookes tube, while the lamp or Geissler tube contains one-thousandth or more. When a high potential intermittent or alternating

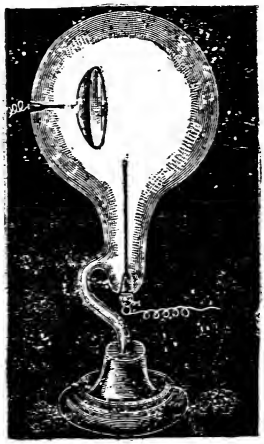

FIGURE 2.

discharge from the induction coil is sent through the Crookes tube, there appears in the tube a fluorescent light of a yellowish green color. These rays are particularly strong around the cathode, and are called cathode rays.

Several important facts about the Crookes tube will bear mention here. First it must be made of the thinnest glass possible, and be sufficiently strong

to stand the pressure of the atmosphere. A tube made of thick glass will heat to a high temperature, while a tube made of thin glass remains quite cool under the influence of the discharge. Thick glass is more highly fluorescent, but is greatly inferior to thin glass in radiographic power.

The intensity coil is necessary in the production of the X-Rays, where a battery or a dynamo is used to furnish the primary current. It consists of two coils, a primary and secondary. To these are added, for the purpose of intensifying their action, a magnetic core consisting generally of a bundle of iron wires. An alternating or pulsating current is passed through the primary coil and produces (by induction) a current likewise pulsating in the secondary coil, although the two coils are entirely unconnected. In order to raise the voltage of the secondary coil, it is made of a finer wire than the primary. A diagram of a battery apparatus for X-Ray work is given, in Fig. 3.

A is the plate holder with objects lying upon it. B is the Crookes tube, C the high potential induction coil, D the storage battery, consisting of at least 4 cells.

The object of which you wish to get a shadow picture must be placed between the Crookes tube and the plate holder.

By the aid of this new form of radiation we are

enabled to photograph objects concealed in a box, a book, a letter case, etc., and even to lay bare the skeleton of a living or dead animal. Its application to surgery will be of great value, as by aid of these rays the surgeon may locate the exact position of a tumor, bullet, fracture, etc. Its value to

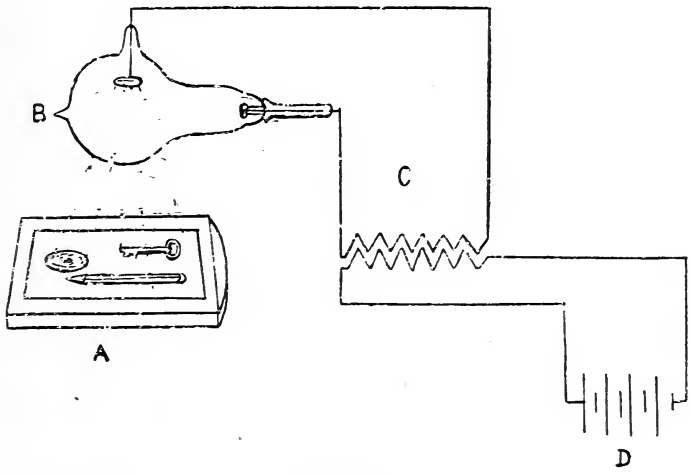

FIGURE 3.

chemistry, metallurgy, and other branches of science is at present inestimable.

The apparatus necessary to produce these rays is a Dynamo, Battery, or a Static machine, an Induction Coil and a Crookes tube or its equivalent; for example, an incandescent lamp with its filament broken and electrodes properly placed, and the bulb exhausted to the proper vacuum. The

photographic plates used are the ordinary quick dry plates.

Fig. 4 shows X-Ray pictures of the hands of two different persons. A is a lead pencil which

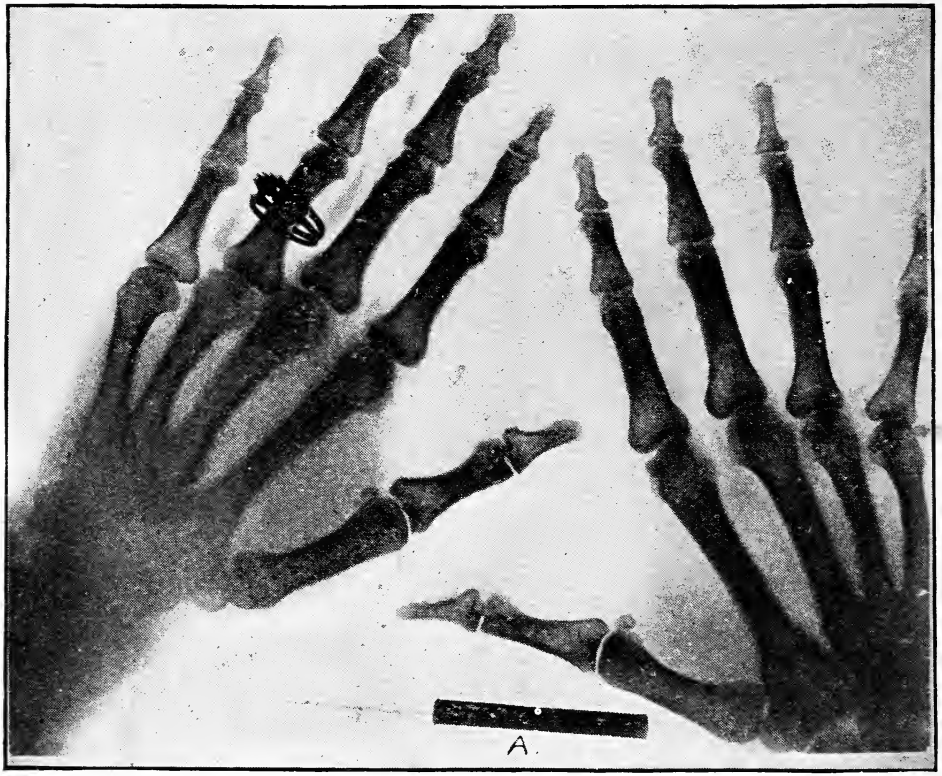

FIGURE 4.

was lying upon the plate holder. The dark part is a metal cap containing the rubber eraser. As you will see, the lead shows quite distinctly.

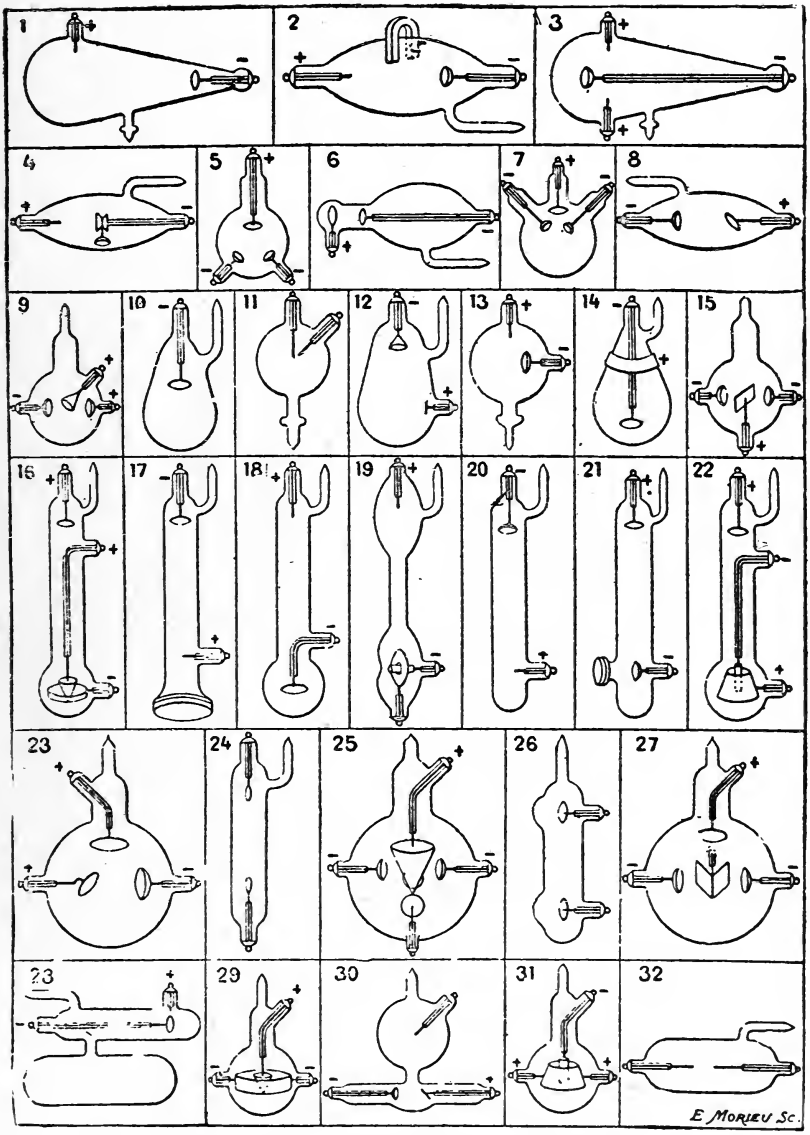

VARIOUS TYPES OF X-RAY TUBES.

The fluoroscope is a device to be used in visual examinations of opaque objects by means of X-Rays. It consists of a wooden box made light tight, and shaped as seen in the engraving.

On the end to be held before the Crookes tube is fastened a sheet of cardboard ; one side is covered with a crystalline chemical salts which become fluorescent when placed in the path of the X-Rays.

By placing an opaque body between the tube and the cardboard of the fluoroscope a shadow is thrown upon it, and is visible to the human eye. It was invented by Edison, who discovered that platino-cyanide of barium had the property of fluorescence, and was the salts originally used. He has since substituted the tungstate of calcium, which he found has the same properties to a much higher degree. The crystals are very minute, and are distributed very evenly over the cardboard.

Any object may be seen instantly by the fluoroscope if the X-Rays are being developed.

CHAPTER XVI.

THE ELECTRIC FOUNTAIN.

An electric fountain is a fountain with apparatus for illumination of its water jets by electric light. The colors are changed by sending the light through different colored glass plates, and various combinations of colors are obtained which make many beautiful effects. A description of the Willow Grove Park Electric Fountain will give the reader a good idea of the construction.

The fountain structure measures fifty feet across; and it has two basins, — one five, and the other eight feet above the lake. It contains thirty-eight nozzles, varying from $\frac{5}{8}$ to $1\frac{1}{2}$ inches in diameter, and eight hundred and sixty-seven $\frac{1}{8}$ and $\frac{1}{4}$ inch jets arranged to throw columns and sprays of water into the air, permitting a large variety of combinations to be made. When these are illuminated by the powerful electric lights they produce beautiful iridescent effects. The photograph from which our illustration was reproduced was kindly loaned to us by Mr. Darlington. This night view of the fountain was taken by a five-minute exposure.

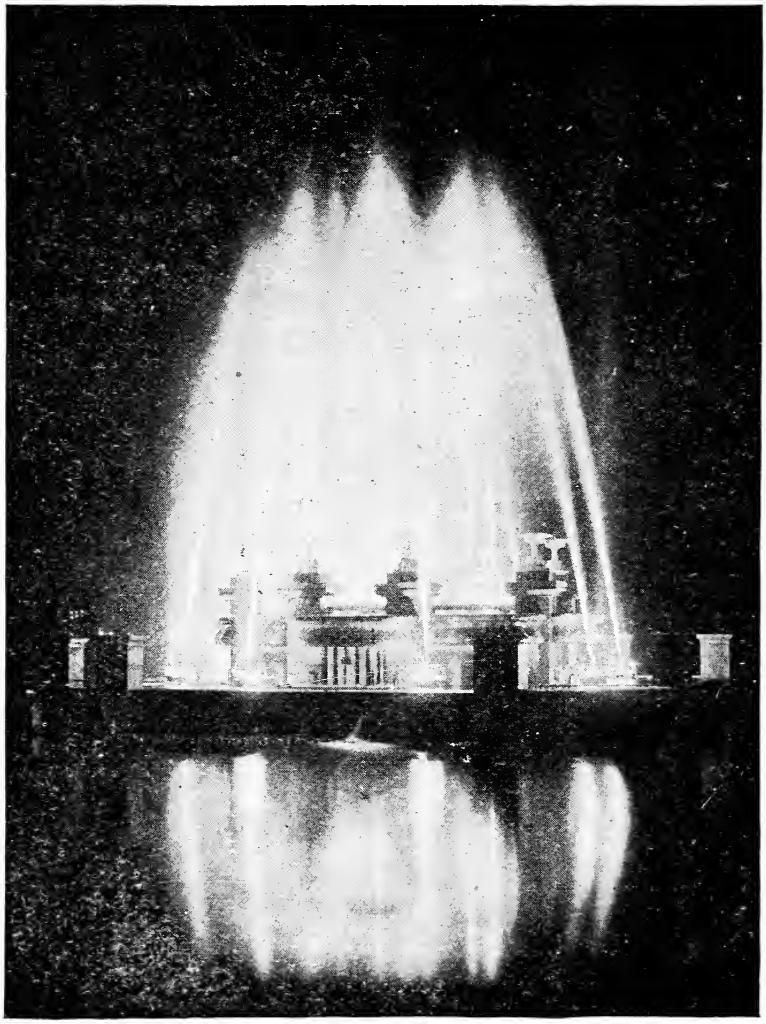

WILLOW GROVE PARK ELECTRIC FOUNTAIN.

The electrical illumination is obtained by powerful electric arc lights beneath the fountain. The colors are produced by means of colored screens placed between the lamps and the plate-glass covered funnels in the ceiling of the fountain basement. The colored screens are rotated and controlled by means of independent hand wheels located at a common point, and varied by an operator to produce the desired combination of colors.

The funnels in the roof through which the light passes are cast-iron turrets, twenty-two inches in diameter and twenty-six inches high, with plate-glass tops. There are eight in the lower and seven in the upper basin.

The roof of the basement is eight feet high at the sides, and is thirteen feet in the middle.

The fountain basement is connected with the operating rooms on shore by means of a tunnel ninety feet long, five feet high, and three and one-half feet wide, and has an arched roof. The main structure of the fountain is cement-covered brickwork, the vases being cast iron, and are painted.

The pipes running along the bottom of each basin are endless, the main feeder and the branches to the nozzles and jetted pipes being connected to the circular pipes by T joints. The central nozzle has direct pipes.

CHAPTER XVII.

ELECTRO–MAGNETIC SURGERY.

ELECTRICITY is now used considerably in surgery and medicine. The following description of removing iron particles from the eye will give the reader an idea of one of the principal uses it is put to. One useful application of the electro-magnet is in locating or extracting particles of iron or steel lodged in the eye. The simplicity and utility of this plan are obvious, and it is found to be of real value to surgeons. The illustration shows the apparatus installed in one of the operating rooms of the New York Eye and Ear Infirmary, to take advantage of the attractive power of the electro-magnet. The soft iron core of the large magnet here used is about two feet long and three inches in diameter, pointed at each end, as shown. The winding is disposed on spools in the manner indicated in the picture, and is supplied with current from the house mains. The whole magnet rests on a stand, and is arranged to turn easily at the touch of a hand. The practical value of the magnetic appliances is described in the *Illustrated*

American, from which the picture is reproduced by George B. Waldron:

Suppose, as often happens, a worker in iron or steel is struck in the eye by a fine splinter of metal from a machine. The intense pain which follows is as nothing in comparison with the imminent danger of losing the eye. The case requires the attention of the most skilful specialist. So the sufferer is taken at once to the hospital.

The first thing to do is to locate the piece of metal. The instrument used is a small needle highly magnetized with electricity. If the splinter is on the surface of the eye, it will cling to this needle, and can be easily removed.

But it may have been hurled with such force as to have become imbedded in the eye itself. The white portion of the eye which surrounds the iris or colored ring is composed of tough muscles, which can be penetrated with only the greatest difficulty. If the iron or steel particle becomes imbedded in this muscular tissue, it will not yield to the magnetic needle.

Now comes the use of the large magnet. This instrument has a drawing force of 16 pounds. As the eye of the patient is pressed toward its point the subtle magnetic power begins to draw upon the splinter. The metal, struggling for release, bulges the eye from the socket. If not too

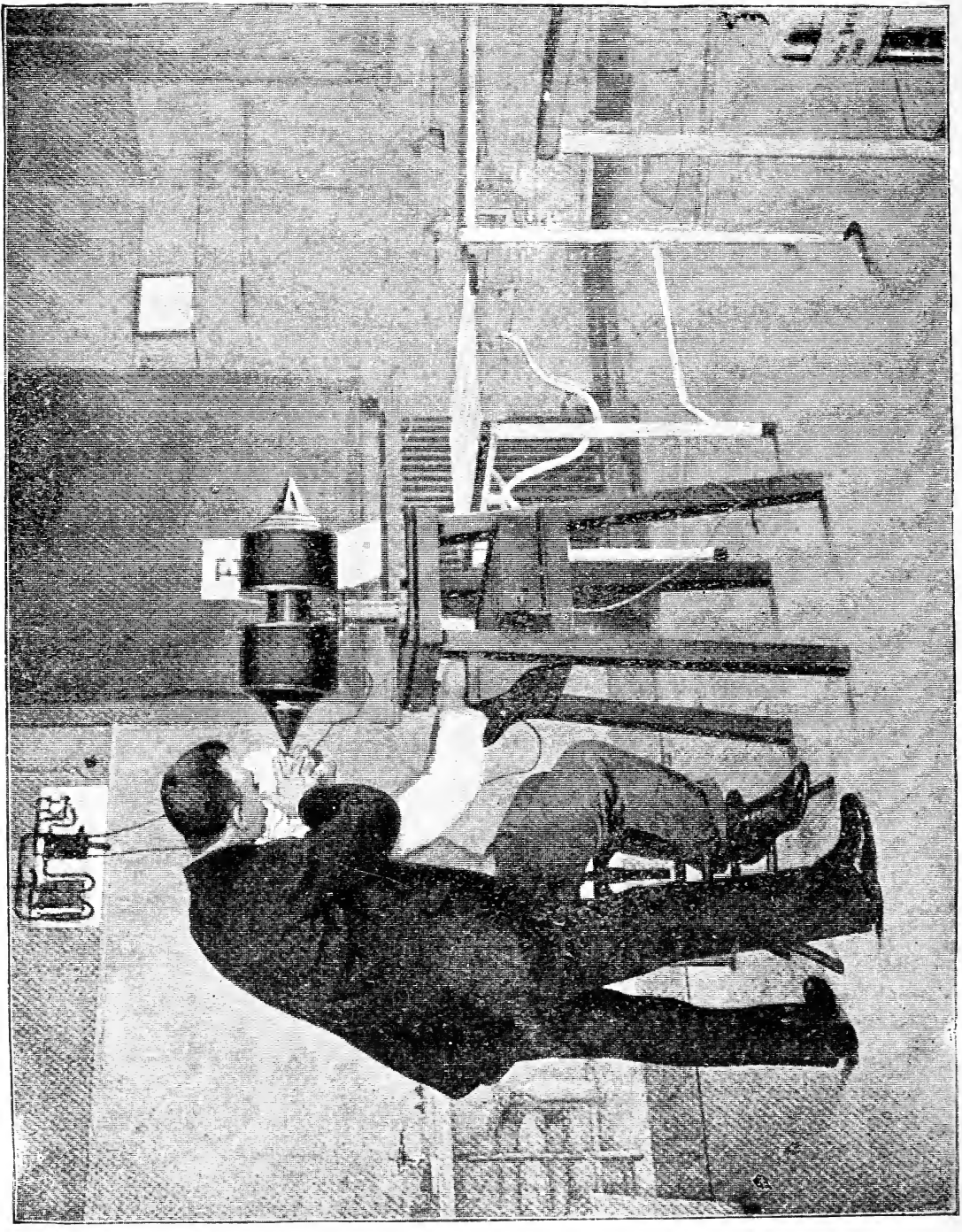

LARGE ELECTRO-MAGNET FOR EYE SURGERY.

deeply imbedded, the splinter will yield to the force, and, leaving the eye, become attached to the point of the magnet.

But, as only too often occurs, the metal may strike with such force as to perforate the coating and drop down into the cavity of the eyeball. Especially is this the case when it passes through the iris or the pupil. One instance was mentioned by the attendants at the hospital of a splinter which passed entirely through the eye, and lodged in the coating on the other side of the ball. Applied to the eye, the big magnet will reveal with accuracy to the skilled sight of the physician the position of the troublesome particle. Knowing this, he can remove it by an operation. Only in the most desperate cases need loss of sight follow.

CHAPTER XVIII.

ELECTRIC WELDING.

Electric Welding Machine.—The machine shown in the engraving on page 259 is for welding 3-inch extra heavy iron and steel pipe.

The process of Electric Welding and Working of Metals, as invented by Prof. Elihu Thomson, has already been so far developed as to produce the most satisfactory results. Welding machines capable of uniting various sections of metals have been placed upon the market, giving manufacturers ample proof of their efficiency and economy, and already becoming a part of the necessary machinery required in the various industries with which they are associated.

The principle involved in this new art is that of causing currents of electricity to pass through the abutting ends of the pieces of metal which are to be welded, thereby generating heat at the point of contact, which also becomes the point of greatest resistance, while at the same time mechanical pressure is applied to force the parts together. As the current heats the metal at the junction to the welding temperature, the pressure follows up the

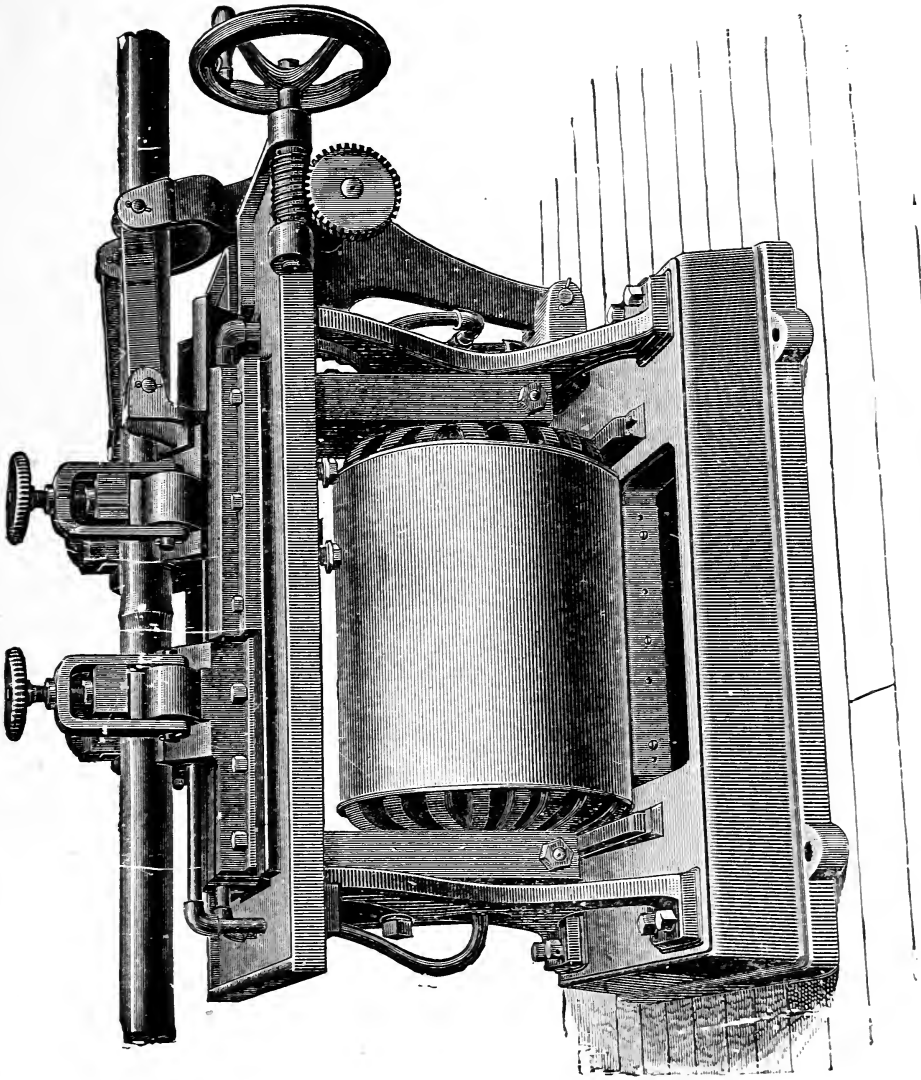

ELECTRIC WELDING MACHINE FOR HEAVY WORK.

softening surface until a complete union or weld is effected, and as the heat is first developed in the interior of the parts to be welded, the interior of the joint is as efficiently united as the visible exterior. With such a method and apparatus, it is found possible to accomplish not only the common kinds of welding of iron and steel, but also of metals which have heretofore resisted attempts at welding, and have had to be brazed or soldered.

Pieces of such metals and alloys as wrought iron, silver, copper, brass, lead, tin, zinc, bronze, German silver, platinum, gold, aluminium and even cast-iron, are not only welded to each other, but different metals can be welded one to another in many combinations, extending the applications of the process to the attainment of results heretofore impossible in metal-working. Solid iron or steel bars three inches thick are welded perfectly. The time consumed in making the weld of this size is from 100 to 120 seconds.

The machines built by the Thomson Electric Welding Company are generators of electricity, so constructed as to produce in the most economical manner the low-pressure currents essential for welding and for similar work. They are of sizes and types suited to the kind and section of the metal to be worked.

The dynamos are built to take power from any source, and the welding machines connected by

ends are in contact an electric ring circuit is completed, consisting of the part included within the primary coils, the clamps and metal to be welded. The energy spent in this circuit is most easily regulated, and is thus adapted to the demands of the work to be done, whether it be thick or thin bars. None of the energy is wasted, and there is no expenditure at all when the welding is not in progress."

The machines now being manufactured are so graded as to apply to various kinds of work, from the smallest wire to bars of over 3 inches in diameter. For heavier work, such as large forgings of locomotive frames, car axles, shafting, etc., special forms of machines adapted to the purpose will be supplied by the company, while by the use of specially adapted holders and clamps applied to the standard forms of machines, various shapes and irregular sizes of metal pieces may be united without difficulty.

The machinery which is used for producing currents for welding, is also used with suitable electric devices, for electric soldering, brazing, shaping, forging, riveting, and bending of metals.

CHAPTER XIX.

SOME MISCELLANEOUS ELECTRICAL INVENTIONS OF THE PRESENT DAY.

PROBABLY no other field, has produced so many new inventions within the last few years as the "electrical field." A large number of patents are being taken out every month on electrical apparatus of all kinds, for use in almost every line of business. Among these the author has selected the following for description.

A Novel Fire and Heat Alarm.—The accompanying illustration shows the Iske automatic fire alarm, manufactured by Stoner, Myers & Co., of Lancaster, Pa. Fig. 1 shows the device with the gong and case removed, the clock work, and means of starting it being visible; while Fig. 2 shows it as it appears hanging on the wall ready for use. The operation is as follows: The two cylinders shown at the bottom in Fig. 1, are connected by a tube which extends nearly to the bottom of the lower cylinder. This cylinder is partly filled with some liquid which will volatilize readily when relieved of pressure, and the whole (cylinders and tube) is exhausted of air, and hermetically sealed.

It is then pivoted at some point on the tube so that the lower cylinder will just overbalance the upper, as shown. When, however, heat is applied, part of the liquid speedily evaporates, the pressure of the vapor forcing part of the remainder through

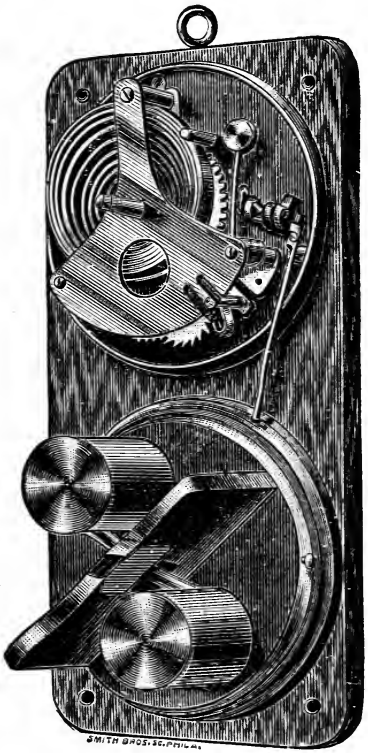

FIGURE 1.

the tube, into the upper cylinder, when it immediately overbalances the lower, and both rotate about the pivot. Their rotation is sufficient to set in motion the clockwork, and start the bell ringing.

The device can, of course, be adapted to electric bells equally well: this is done by simply causing a small pin which is attached to the pivot, to make a contact and cause a circuit connected with an electric battery and bell, which sets the bell to ringing,

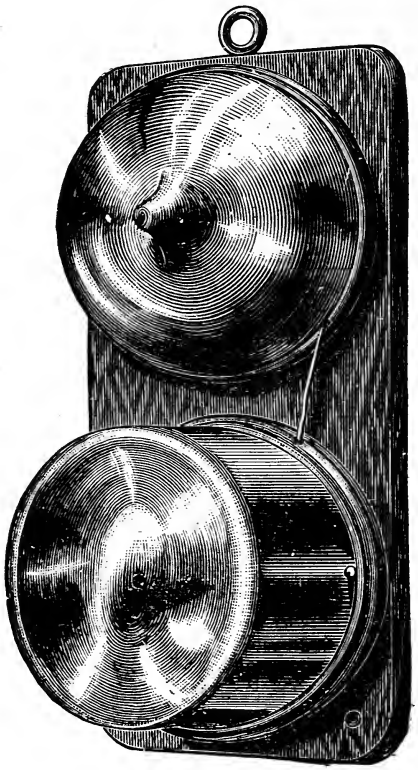

FIGURE 2.

but where it is not desired to sound an alarm at a distance, the clockwork is held preferable, on account of its simplicity, cheapness and portability. The clockwork is entirely encased by the gong,

and is wound by means of it, so that no key is required. The alarms, unless specially ordered, are made to sound at 110° Fahrenheit.

The Otis Electric Elevator.—See illustration on page 268. Elevator machinery as a rule meets with the roughest manipulation while in use. No other apparatus operated by electric power is exposed to such strain—not even in street railway service, where, at least, the same operator is constantly in charge and a systematic inspection considered indispensable.

By carefully considering these special conditions, this company has succeeded in perfecting an electric elevator which is well suited to many places where it has heretofore been impracticable to use such an apparatus. The winding-machinery and safety appliances (including the Safety Governor, the Gravity Wedge Safety, the Automatic Stop-motion and the Slack-cable Stop; also the devices for controlling the movement of the elevator-car) are such as they have been constantly building for the past twenty-five years; consequently there are no experimental features. To give motion to the elevator machinery, they connect therewith, and make a part of the same, the very ingeniously constructed motor (invented by Mr. Rudolph Eickemeyer, of Yonkers, N. Y.) which possesses many novel and meritorius features, especially adapted to elevator-service, for which it is expressly designed.

This motor, when so combined with the elevator, stops and starts with a gradual movement, and consumes power only in proportion to its load, and

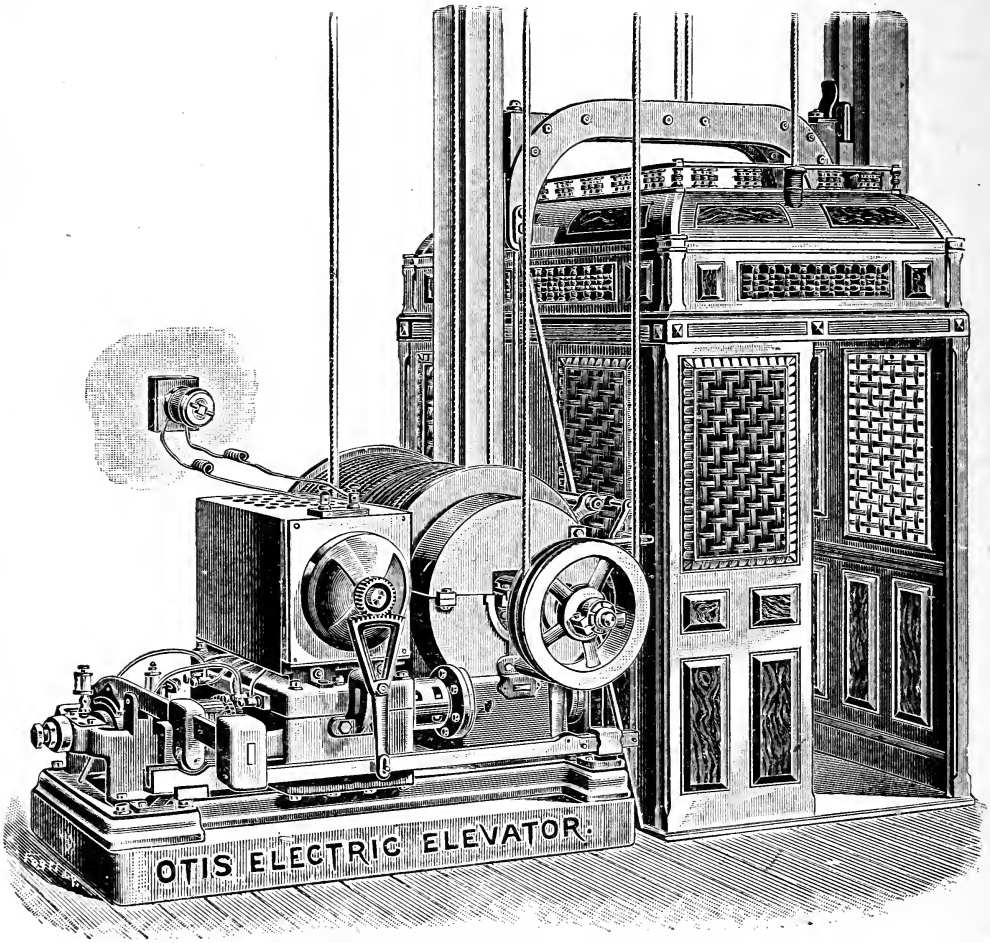

only while the elevator is in use, thus effecting the greatest economy in the consumption of power. It possesses in a high degree the best points of motor-

construction, and a high efficiency is obtained. Simple and accessible in all its parts, of the best material to meet electrical and mechanical requirements, it is also protected by its unique construction, which makes the motor completely iron-clad without adding any unnecessary weight. It has, further, the special advantage of a powerful field and the shortest possible magnetic circuit, which entirely prevents "sparking" at the commutator, and affords perfect self-regulation. It may also be added that, although it possesses a very strong magnetic field, yet there is no external magnetism in the machine. The motor is so coupled to the elevator-gear that it starts and stops with the winding-machinery, the whole being under perfect control of the operator in the car, thus forming a self-contained apparatus, free from jerky and irregular running of detached gearing, as when operated by belts.

The difficulties heretofore experienced from heating or "burning out" have been effectually guarded against in this machine; and, in connection with the operating device, they employ an indicator which at all times shows the operator in the car the exact position of the controlling and and reversing-switch on the motor.

The Home Electro-Medical Apparatus is shown on page 270. For doctor or patient, this electro

medical apparatus is the most convenient and reliable. It is reliable because with its Dry Battery so much less care is necessary to avoid getting it out of order. The entire absence of acids, liquids or salts, will be appreciated by any one who has ever had occasion to use a medical battery. The box when closed up may lie in any

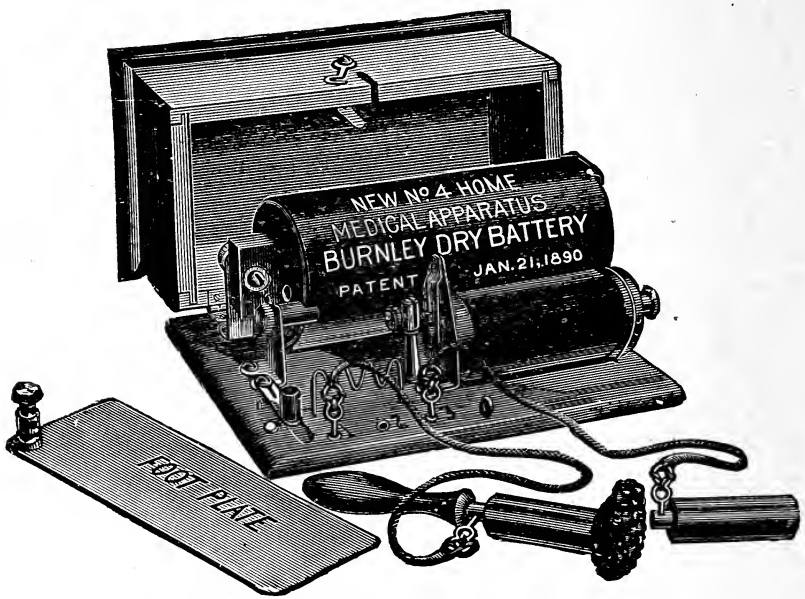

THE HOME ELECTRO-MEDICAL APPARATUS.

position on a table or shelf, or in the bottom of a carriage without harm.

The strength of the various currents ranges from those which are so mild as to be scarcely perceptible, to the most powerful that can be endured by a strong man.

The appliances furnished with the apparatus

consist of foot-plate, sponge, cords, and handles (electrodes). The electrode having a wooden handle is used as a sponge-holder when required. The sponge is held by it, by pressing part of the moistened sponge in the hollow tube of the electrode. The small switch at the left-hand end of the base is turned to the left to put the battery in operation. When this is done, if the spring at the left-hand end of the coil does not at once vibrate it should be given a slight impulse with the finger, and it will continue to vibrate with the power of the battery, if the screw is turned to its proper position. This can be ascertained by turning it forward or back.

If for any reason it is desired to take out the battery, this can be readily done by loosening the screws which clamp its poles to the flat upright pieces, when the battery cell can then be lifted out of the plated cup, on lifting the latter, which is hinged to an upright positon. In returning the battery to its position, notice that the carbon pole belongs and fits to the flat upright at the back of the base, and the zinc pole fits the upright nearest to you.

CHAPTER XX.

ELECTRO-PLATING.

THE author will not attempt to give any practical directions for electro-plating, the space allotted to this subject being too small, but will simply describe the process in a general way so that the reader may have a fair understanding of the principle. Should he wish for a more practical knowledge, he may find a number of good works on the subject in almost any book store.

This art was discovered by Dr. Wollaston in the year 1801. He observed that a piece of silver immersed in a copper solution when connected with a more positive metal became coated with copper. But it was not until the year of 1840 that electro-plating came into commercial use, being introduced at that time by Messrs. Elkingtons.

The present process of electro-plating consists of placing an "anode" and the article to be plated in the plating bath and causing a current of electricity to pass from one to the other through the plating solution; this causes the anode to dissolve and then to be deposited on to the surface of the article. The necessary current may be supplied

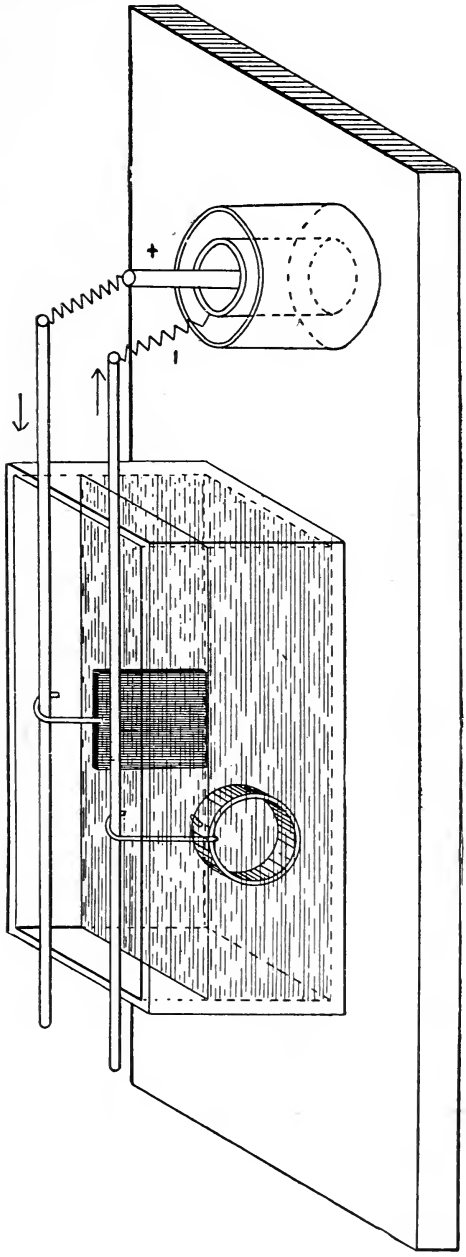

FIGURE 1.

by an electric battery or a dynamo, of course depending on the strength of the current required.

Fig. 1 shows an electric battery and a plating vat containing the silver solution. The anode which is a plate of pure silver is suspended from the rod connected to the positive pole of the battery, the article to be plated being suspended to the rod connected to the negative pole. The silver solution is the double cyanide of silver and potassium. The addition of a minute trace of bisulphide of carbon to the solution will cause the deposited metal to have a bright surface. Should the current be too strong and the deposition too rapid, the deposited metal will be greyish and crystalline.

Articles to be plated should first be cleaned by washing in soap and hot water, and then rubbed perfectly dry. In gold or silver plating iron objects, they should first be given a thin coating of copper.

Gold solution is usually worked warm. Articles after being plated are polished by a burnisher, brushes, dry flannel and chamois skin.

CHAPTER XXI.

ELECTRIC GAS LIGHTING APPARATUS.

Now that Electric Gas Lighting and Bell Fitting has become a universal need, the following directions will not come amiss. Where a competent electrician can be employed it will be better to employ one, but in case it is impossible to do so the amateur may, by following the directions here given, do a very good piece of work.

DIRECTIONS FOR SETTING UP AND MAINTAINING BATTERIES.

Crowfoot Gravity Battery. — Open out the copper, so as to present all of its surface to the action of the solution, place it in the bottom of the jar, run the insulated wire out of the top of the jar for connecting up. Suspend the zinc above the copper by hanging the hooked neck on the rim of the glass. The neck of the zinc is provided with a connecting clamp to receive the wire from the copper of the next cell. Pour clean soft water into the jar until it covers the zinc, then drop in six or eight ounces of copper sulphate (blue vitriol) in small crystals. Connect the battery (for ordinary purposes) zinc of one cell to copper

of the next and so on, and connect the two electrodes of the series and let them so remain for a few hours, until the separation of the two solutions which will be known by the blue observed in the bottom of copper solution. This "blue line" should be maintained midway between the zinc and copper; when it is too low, drop in a few crystals of copper sulphate, when too high, connect the battery in short circuit as before described until it goes down. While the battery remains in action there is an increase in quantity of zinc sulphate solution in the upper part of the jar. The specific gravity of this solution should be maintained at 25°; when the hydrometer indicates a lower degree there is too little zinc sulphate solution, when a higher degree than 25° there is too much zinc sulphate, and a portion of it must be taken out, and that remaining diluted with pure water. When zinc oxide forms on the surface of the zinc, it must be taken out and washed in clean water with a brush.

Daniell Battery.— Fill the jar and porous cell with water and the pocket with copper sulphate. The directions for Gravity Battery will apply to the maintenance of the Daniell.

Samson Battery.—Directions for setting up and using.—Put six ounces of Sal Ammoniac in a glass jar, fill one-third full of warm water, and stir well.

Clean, soft water is preferable. Use no more Sal Ammoniac than will readily dissolve.

Insert the Carbon Vase and Cylindrical Zinc, taking care that carbon is insulated from Zinc by cover and rubber band. See that cover fits down over the Carbon into its place in neck of jar; only one rubber band is required, say an inch from bottom of Carbon. When the Battery is set up, the solution should not quite reach the lower line of paraffin around neck of jar.

The Battery should be put in a cool, dry place. See that connections are clean and firmly made, and that the connecting wires are properly insulated.

When you add Sal Ammoniac or water to make good any loss by evaporation, take out both Carbon and Zinc, and keep top of jar dry. It is better not to add Sal Ammoniac to an old solution, but rather to use a little water and stir well.

When the battery fails to work properly, throw out the solution, clean Carbon, Zinc and connections; let the Carbon stand in a warm place until old solution leaks out — if possible let it dry through — then set up the Battery with fresh solution.

When exhausted from overwork or repeated grounds, clean the Carbon, let it soak half an hour in hot water, give it a day or two of rest in the sun

or other warm place, and it will again show up its full strength.

Leclanchè Battery. — Directions for setting up. — Put six ounces of Sal Ammoniac in a glass jar, add water enough to fill the jar about one-third full, stir this until it dissolves, pour a little of this solution into the porous cup, put the cup and zinc into the jar, and connect the battery as usual.

Grenet Battery, to Make Solution. — To three pints of cold water, add five fiuid ounces of sulphuric acid; when this becomes cold, add six ounces (or as much as the solution will dissolve) of finely pulverized bichromate of potash. Mix well.

To Charge the Battery. — Pour the above solution into the glass cell until is nearly reaches the top of the spherical part; then draw up the zinc and place the element in the cell. The fluid should not quite reach the zinc when it is drawn up.

Carbon Battery. — Fill the glass jar with water; the porous cell with electropoion fluid. The height of the liquid in the jar and the porous cells should be about the same.

Directions for making "Electropoion Fluid" for Carbon Battery. — Mix one gallon sulphuric acid

and three gallons of water. Then, in a separate vessel, dissolve six pounds of bichromate of potash in two gallons of boiling water, mixing the whole thoroughly together. When cold it is ready for use.

To Amalgamate Zincs. — This may be very well done by first immersing the zinc in a solution of dilute sulphuric acid and then in a bath of mercury. A brush or cloth may be used to rub them, so as to reach all points of the surface.

The Fuller Mercury Bicromate Battery. — Amalgamate the zinc and its copper rod in the usual way. Place the zinc in the porous cells and pour into the latter a tablespoonful of mercury. Fill the porous cell with water to within about two inches from the top, Place the porous cell and the carbon in their positions in the jar as shown in the cut of the battery. Then fill the jar to within two or two and a half inches of the top, with a mixture of three parts of electropoion to two parts of water. The zinc should be lifted out occasionally and the sulphate washed off. Keep a supply of mercury in the porous cell so as to have the zinc always well amalgamated. If the battery does little work it will last three or four months without being touched. To renew, clean all deposits from carbon and zinc, and set up with fresh solutions as above.

HOW TO PUT UP AUTOMATIC GAS BURNERS.

The battery to be used is some form of open circuit, preferably the Samson on Leclanché Disque. Place the battery, consisting of four or six cells, according to size of the house or number of burners to be used, in the cellar or lower hallway, taking care to select a place of uniformly cool temperature. The place selected should not be too dry, for a dry atmosphere tends to evaporate the fluids too rapidly; nor very damp, as too much moisture interferes with the action of the battery.

To Connect the Battery. — Connect the zinc of one cell with No. 16 or 18 wire to the nearest gas pipe on the house side of the gas meter. To make contact with the gas pipe perfect, file a bright surface on it and wind the bared copper wire around it several times. After the cells have been joined together, carbon of one to zinc of next, run a wire from the last carbon through the one-point switch, located near the battery, to the spark-coil; then from the spark-coil make connection to the bunch of wires which lead to the various rooms of the house.

To Detect a Ground. — Disconnect the battery wire from the bunch of wires in the cellar and touch each house wire with it separately. The grounded wire will be detected by a spark and

should then be left out of the bunch of wires, which may now be connected with the battery wire again. The fixtures to which the grounded wire runs should be carefully examined, as the trouble is most likely to be in the fixture wiring or where the connection is made back of the wall plate. If, however, the trouble is between the fixture and the cellar, a new wire should be run. After the trouble is removed connect the wire with the bunch of wires as before.

For Automatic Burners, run wires from the cellar (where connection is made to battery wire) to the centre brass strips on the rear of the key, or press-button plate. Run wires from the other points of the press-button plate to the automatic burner, which is to be governed from that point, and connect the wire from the black press-button to the electro-magnet which shuts off, and the wire from the white press-button to that which turns on the gas. The circuit for lighting is made from battery, through switch, spark-coil, wire, brass strip on press-button plate, by pressing the white button, through the electro-magnet which turns on the gas; wire at the tip of the burner (by the union and parting of these wires the igniting spark is made), thence to the gas pipe, and back to battery. For shutting off, the same circuit is made, except that by pressing the black button the

circuit is closed through the other electro-magnet in the automatic, thus shutting off the gas.

Volunteer Pendent Burner.—The first pull turns on and ignites the gas, and holds the arm in the slot; the second pull releases the arm and extin-

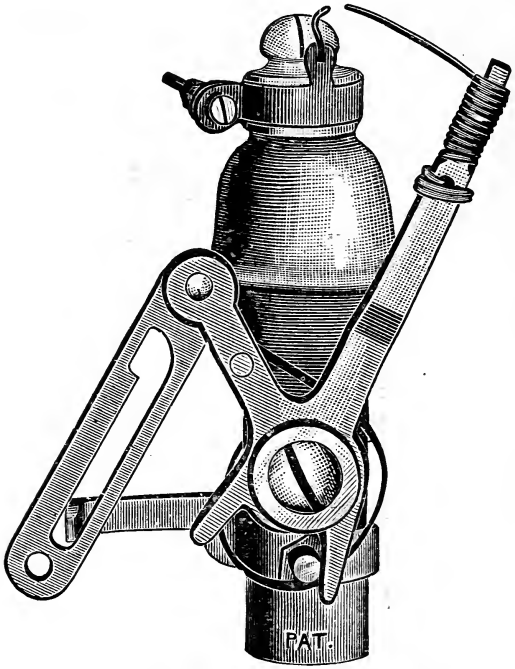

VOLUNTEER PENDENT BURNER.

guishes the gas. From the position of the arm it can be readily ascertained whether the gas is on or off.

The Advance Welsbach Burner.—The Advance Attachment is an adaptation of the Regular Advance burner in order to make it available for use

with the Welsbach and similar burners. Owing to the construction of incandescent gas-burners, it is necessary to light them from below by means of a small gas flame which issues from a pilot tube at the side and just beneath the main burner. By turning a key (just as a common gas-key is turned) the entire operation is accomplished. As the key is turned, the gas is at once turned on, both in the main burner and in the pilot tube; the electrodes meet and light the gas at the pilot tube, this flame instantly reaches up to and ignites the main burner, the pilot tube is then extinguished, leaving the main gas-way open and the light burning. A reverse motion of the key turns out the light.

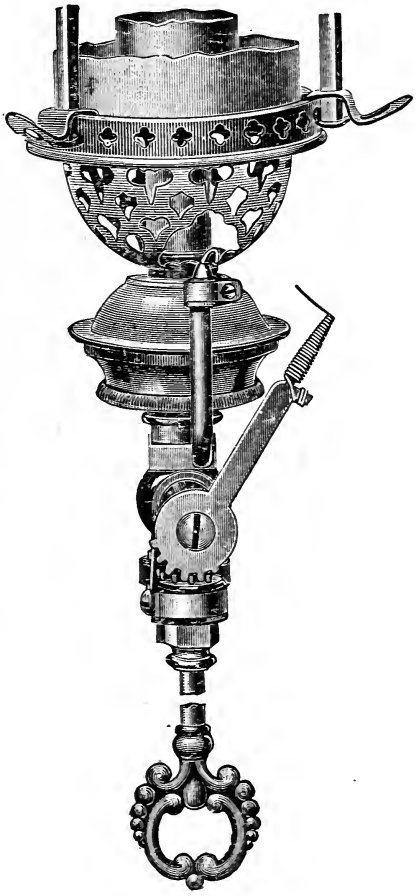

The important features of this attachment are

that it does not short-circuit, owing to an ingenious arrangement of the movable electrode; and it avoids breaking of the mantles because of the smooth, easy method of ignition.

The "Advance" Automatic Burner.—There are two double magnets operating two armatures, which

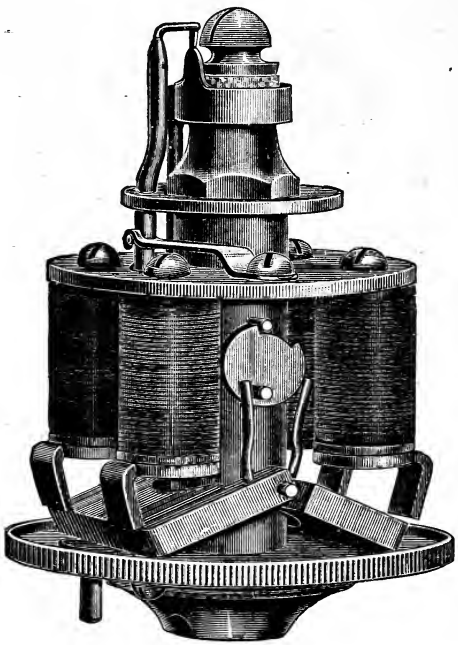

throw off and on the valve and at the same time raise the spark contact. The throwing off of the valve is controlled by the armature acting on a single pin in the head of the valve plug.

The Thumb-Cock Burner, here shown, has an attachment upon the small end of the gas-cock,

located in the base of the burner, consisting of a vibrating arm with an elongated hole, tripping-pin and cam. By the opening movement of the gas-cock the vibrating arm, with its elastic contact point, is forced against and past the fixed electrode, tripped and returned by means of the retractile spring, leaving the gas turned on and lighted, — a quarter turn of the thumb-cock backward extin-

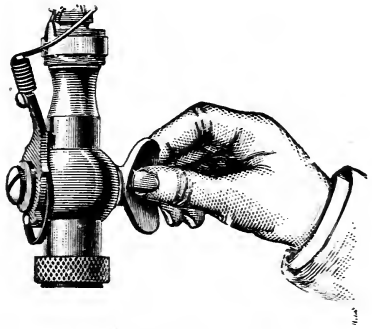

THUMB–COCK BURNER.

guishes the gas. The operation is such that short-circuiting at the electrodes is next to impossible.

TO PUT UP THE HAND–LIGHTER.

Run a single wire from the battery as with the Automatic, and connect it with the binding screw on the insulated collar at the tip of the burner. The movement of the pending chain brings the spring wire at the end of the movable arm into connection with the fixed electrode on the insulated collar, closing the electrical circuit, the sub-

sequent breaking of which produces the igniting flash or spark.

GENERAL DIRECTIONS.

Switches. — A switch near the battery is useful, so that in case of any trouble the occupants of the house can switch off the battery and save it from running down.

Spark-coil. — An eight or ten-inch spark-coil is sufficient for lighting coal-gas.

Connections. — Simply winding the wire is not sufficient to produce a perfect connection; soldering is necessary, and rosin, not acid, should be used.

Insulation. — Particular care should be exercised in every part of a job, that perfect insulation be obtained. Any leakage will rapidly destroy the efficiency of the battery. Every foot of wire should be closely examined before being run, and all suspicious places wound with the rubber tape.

Running Wire in Damp Places. — Extra care should be taken in running wires through damp places. For walls and other equally bad sections, rubber-covered wire is good. Where tacks are used, the wire should be covered with rubber tape. Steam or hot water pipes should never be crossed,

except that extra care be taken that the wires do not come in contact with them, as the heat melts the paraffin on the covering of the wire and destroys the insulation, often causing a ground.

Hints for Running Wires out of Sight. — From key or press-button plate on the wall to the floor. Punch a hole through the plastering at the required position, being careful that there is no studding at that place. Use a brad-awl, and cut the hole large enough to set in the press-button plate. With a few inches of small brass spring wire, push through the opening a few inches of No. 19 double jack-chain, such as is used for general fishing purposes, first having connected the end of the chain with a piece of heavy linen thread. Run out the thread until the chain touches the floor beneath (between the laths and the outside wall); move the thread and locate the chain by sound. Bore a hole through the base-board or floor, as the case may be, towards the chain. Use a two or three-foot German twist gimlet. With a small brass spring wire, bent at the end in the shape of a hook, fish for the chain and draw it out. At the other end of the thread attach the wire and draw it through with the thread. Passing under the floor, bore a second hole through the floor as near the other as possible. Run into this a piece of snake or fishing wire (which is x $\frac{1}{64}$ inch steel

wire, with a hook at the end), until it comes to an obstruction. Locate the obstruction by sound. In running wires under the flooring, first carefully examine all parts and find the direction in which the beams and timbers run, and run wires parallel with these. After locating the end of the fishing wire, see if the obstruction be a timber; if so, find the centre and bore from the middle diagonally through it in the direction of the fishing wire. Drop a jack-chain and thread through the hole; fish for it and draw it through hole No. 2, attach the insulated wire and draw it back. Starting at hole No. 3, bore hole No. 4 diagonally through the timber in the direction in which the wire is to be run, making holes Nos. 3 and 4 form an inverted V through the timber. Run the fishing wire through hole No. 4, until it meets an obstruction. If at the end of the room, bore through the floor, drop chain, fish it out, attach wire, and draw it home. Putty up holes after having done with them; or in case of hard finish, plug them up with wood. In lightly built houses it is often found easier to take off the moulding above the base-board and run the wire under it. In such cases care should be taken to break off the old nails, as any attempt to drive them out would cause a bad break. In closets and around chimneys it is usually found easy to work. A mouse or lead weight attached to a string may often be dropped

from the attic to the cellar ceiling through the space outside the chimney. It is well before starting on a job to carefully examine the whole house, and find the easiest places to run in. When necessary to take up carpets, be sure to put them down again as quickly as possible, in order to reduce to a minimum the inconvenience to residents.

WIRING FIXTURES.

Where it is impossible to run the wire between the gas pipe and the outer shell, run it above if the fixtures be overhead; below if the fixtures be low down, and bind the wire close to the fixture with fine thread, being sure that the sharp corners will not cut through the insulation and eventually cause a ground. Shellac the wire to the pipe, and when hard, remove the thread. At the joints or hinges connect the nearest set points by means of a wire loop of sufficient size to in no way interfere with the action of the fixture, and wind the insulated wire around this loop in the form of a spiral. Great care should be taken that perfect insulation be obtained, and in all such parts the wire should be covered with rubber tape. In running wire between the gas pipe and the outside shell, the same care should be exercised to guard against grounding. To pass the rings and other sections where there is not sufficient space, bore

through with a small monkey-drill, or punch a hole with a brad-awl, or file off sufficient metal to allow an exit; if necessary, run the wire through and over the obstruction. Rubber tape must be used wherever the wire passes near the metal of the fixture or is liable to touch it.

The Best Time to Wire a House is when the builders have finished boarding in and have not yet commenced lathing. The cost of wiring at that time is very much less, sometimes not more than one-half as much as in the finished structure. In houses already occupied, the inconvenience caused by putting in wires is slight. Little or no dirt need be made; there need be no hammering and pulling away plastering, laths and floors. The most expensive finishing should in no way be injured by the workmen. When the job is complete and well done, it will be difficult to discover evidence of the work having been done.

TOOLS AND MATERIALS NECESSARY FOR WIRING A HOUSE.

Rubber Tape, for winding wire where tacks are driven for holding wire overhead — to insure perfect insulation, and prevent breaking through because of sharp edges.

Tags, for numbering wires at the battery.

Double-pointed Tacks, for holding up wire. Use as few as possible.

Brass Spring Wire. A few inches for pushing chain through holes.

Steel Spring or Snake Wire, for fishing purposes. Fifty feet is sufficient.

No. 19 Double Jack Chain. A small amount for dropping purposes.

Common Brad Awls, for punching holes through walls, etc.

German Twist Gimlets, two and three feet long, $\frac{1}{4}$ or $\frac{5}{16}$ in., for boring purposes.

Rat-tail File, for filing holes through fixtures and other metal.

Monkey Drill, for drilling through metals.

Wire. No. 16 or 18 braided wire is heavy enough, if it is well insulated. Great care should be taken in examining the wire to see that it is thoroughly insulated, as more depends upon this than any other feature of the job. The larger the wire, the less the resistance.

The reader can form from a diagram on next page, and plan on page 293, a very good idea of how to wire a house for Electric Gas Lighting.

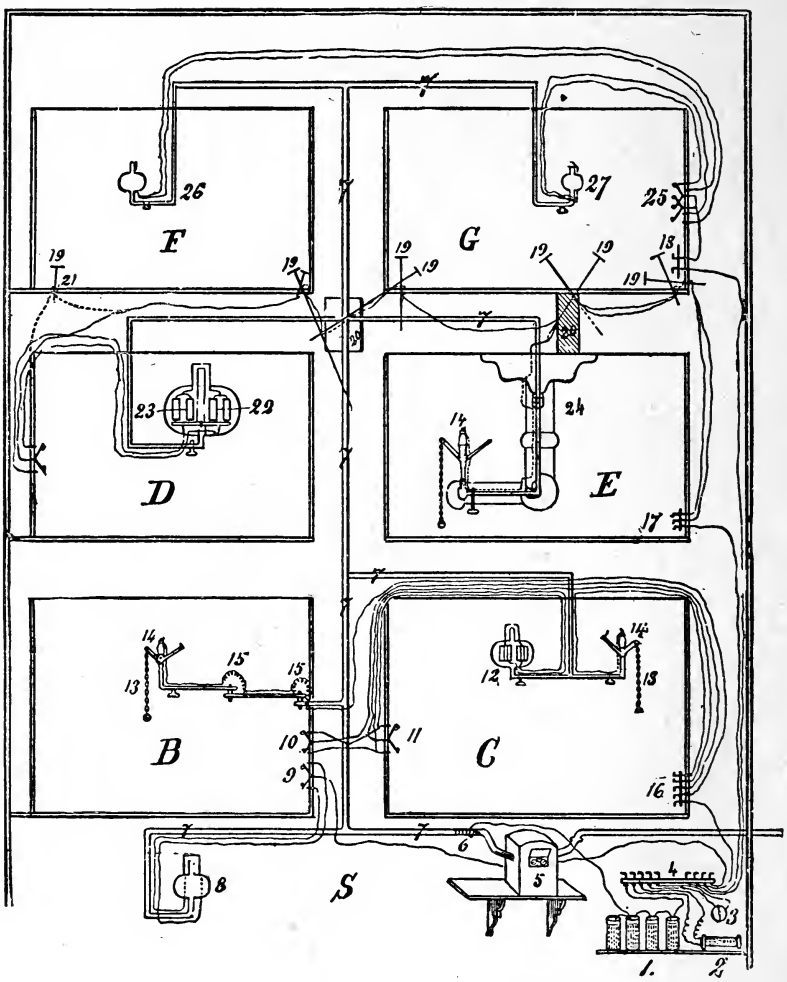

DIAGRAM FOR WIRING A HOUSE.

PLAN FOR WIRING A HOUSE.

1 Battery on Shelf.
2 Spark-coil.
3 Galvanometer.
4 Switch-board, with Individual Switches.
5 Gas-meter.
6 Connection of wire from battery with gas-pipe on house side of meter.
7 Gas-pipe.
8 Automatic in room S.
9 Press-button or key-plate for lighting No. 8.
10-11 Press-button for key-plate Automatic No. 12.
13 Pendant Chain of Hand-Lighter.
15 Loop for passing wire around joint in fixture.
16 Switch for first floor.
17 Switch for second floor.
18 Switch for third floor.
19 Gimlet, showing direction of holes for running wires out of sight.
20 Beams, with wires run through them.
21 Showing manner of carrying wire around corner of room below, bringing it through hole and then dropping it back into position.
22 Part of Automatic, with Electro-magnet, showing the shut-off.
23 The same, showing the turning on and lighting.
24 Showing how to run wire between gas-pipe and fancy covering of fixture.
25 Four press-button plate, lighting Nos. 26 and 27.

CHAPTER XXII.

ELECTRICAL MEASUREMENT.

BEFORE commencing our description of the measuring instruments and their uses, we will take a brief survey of the quantities to be measured. Electricity requires a "push" to force it over the conductors, just as water and steam require a pressure to make them flow through pipes. This push is called the Electro-motive Force, or the E. M. F. of the circuit and is measured in volts.

We speak of electrical quantity just as we do of water quantity. The latter is measured in gallons and the former in coulombs. The coulumb is not used much in practical work, but in its stead we have the ampere which is the unit of the *rate* of flow of electricity and is equal to one coulomb per second. The flow of electricity is attended with friction or resistance, just as the movement of water in a pipe, and we have a unit to measure this resistance called the ohm. These units are all dependent upon and bear a fixed relation to one another. This relation is expressed by Ohm's Law which says in substance that the current over a

given conductor is equal to the E. M. F., acting upon it divided by its resistance.

Algebraically this is $C = \frac{E}{R}$.

Where C = current in amperes, E = E. M. F. in volts and R = resistance in ohms. By a slight transformation of the above equation we can get the value of the E. M. F., or the resistance in terms of the other two quantities.

The three are given below:

Amperes = Volts ÷ Ohms.

Volts = Amperes × Ohms.

Ohms = Volts ÷ Amperes.

As an example of the application of the formulæ, suppose we have an incandescent lamp running upon a 110 volt circuit, and suppose its hot resistance is 200 ohms, required the current passing through it. $110 \div 200 = .55$, or the lamp uses .55 amperes.

These three electrical units are all that are used much in practical work, and are all that need be described here. There is however one mechanical unit, the watt, which is used very often in connection with these. It is the unit of the *rate* of the expenditure of energy and is of the same nature as the horse-power but smaller. Seven hundred and forty-six watts equal one horse-power. We may find the watts used in a circuit by three formulæ with the above units.

Watts = Amperes (squared) × Ohms.

Watts = Amperes × Volts.

Watts = Volts (squared) ÷ Ohms.

As an example, what is the horse-power used in an arc lamp running on a 10 ampere circuit at a pressure of 50 volts?

10 × 50 = 500 Watts.

500 ÷ 746 = .67 horse-power.

Measuring Instruments. — Electrical test instruments which are intended for anything more than to indicate the presence and direction of the current or make comparative measurements of its value must be "calibrated." This is generally done by comparison with a standard. Unless there is something of this sort accessible it is not much use for the amateur to try to do anything in the way of making electrical measuring instruments. Moreover, he must not expect to produce an instrument that can be relied upon for very accurate work. This is only done by the best instrument makers and with high-priced articles.

In what follows we shall describe apparatus suitable only for rough work, but this must not be taken as implying that it may be carelessly constructed. The small extra trouble in doing the work conscientiously will save an endless amount of annoyance when you come to use it.

The Bridge. — This piece of apparatus comes first upon our list, as it is used perhaps more than either of the others and often in conjunction with

them. The one we shall describe is but a slide-wire bridge, not the ordinary Kirchhoff pattern. It is a modification due to Cardew, which is direct reading, and so does away with the troublesome calculations incident to the working of the other.

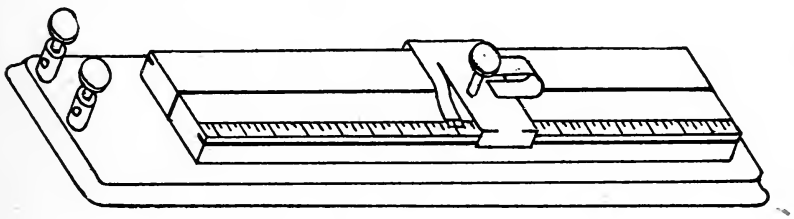

FIGURE 1.

Figure 1 gives a general view of the bridge when complete. In the middle is a stick of hard, well-seasoned wood, 24 inches long, 1½ wide, and 1 high. Into each side a slot is cut, by running the piece over a circular saw, for guides for the rider. The slot should be ¼ of an inch from the top. The rider itself is made from sheet brass, $\frac{1}{32}$ inch thick cut and bent into the form shown in Fig. 2.

The guides G must fit into the slots cut into the sides of the piece of wood described above and the body of the slider clear the top of the wood strip by ⅛ of an inch. An index I, is cut and bent down as shown and has its end beveled and a small mark on it. This end runs close to the scale which will be put in the wooden strip and

the mark is to read from. To prevent side motion one side of the slider is cut and bent inwards just far enough to press firmly upon the sides of the strip. On top a piece of light spring brass is soldered and has a button and a brass contact piece fastened to the end. The end of the contact piece is filed to a chisel-shaped edge, not sharp

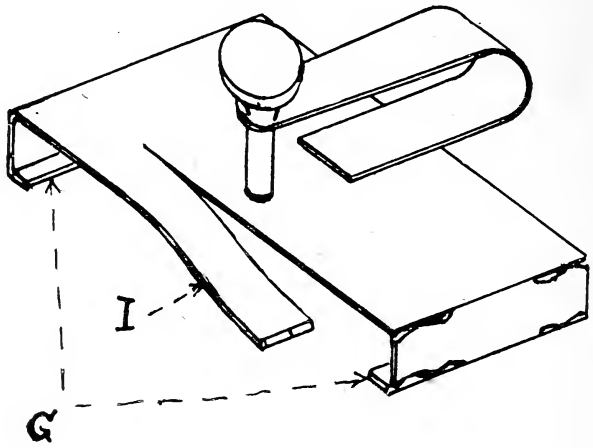

FIGURE 2.

nowever, and a small notch is made in this edge to receive the wire when it is pressed down on it. In its normal position the contact should clear the wire by about a $\frac{1}{16}$ of an inch. It is guided of course by the hole through which it passes in the top of the slider.

Make a wooden base for the instrument 30 inches long, 6 inches wide and $\frac{3}{4}$ inch thick. Screw

the wooden strip to this base so that it will be in the middle of the length of the board and 1 inch from one side. Place two binding posts at one end of your board for your unknown resistance. They should be fairly good-sized, so that the contact error in them may be small. For your slide wire use a piece of No. 25 German silver or Platinum wire. The latter is preferable on account of its greater resistance and smaller temperature error. Fasten one end of this to one of your binding posts on the under side. This must be done very securely, and a drop of solder will insure its staying. Then carry your wire up through a hole in the base-board at one end of the strip, over the top of the strip, along its length, and down the other end. Draw it tightly and take a turn around a screw to hold it in place and then carry the wire up and down the length of the board three times, taking it around a screw-head at each end to hold it taut and finally take it through another hole in the base-board and secure it to the other binding post. Wherever the wire goes on the under side of the board, it must be run in a groove to prevent its being caught and pulled when the instrument is moved around. Following is a skeleton diagram of the bridge. See Fig. 3.

A and *b* represent the proportional arms; *c* represents that part of the wire from the binding post to end of the movement of the slider; *d*

represents the range of the slider and c is measured from e to b; x is of course the resistance to be measured.

You must first determine the range of readings you desire. From zero to 100 ohms is a convenient position. Then measure by some other bridge as accurately as you can e and d. It can easily be shown by algebra that the ratio

$$b : a :: d : x—d$$

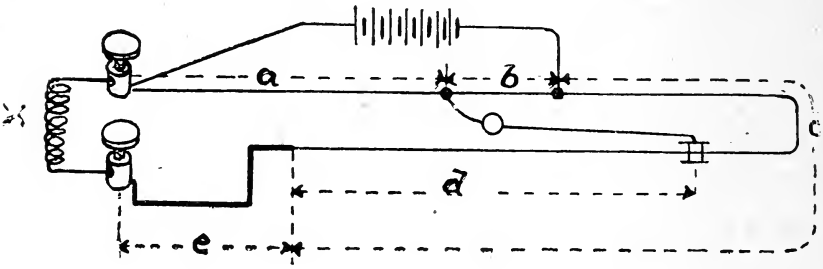

FIGURE 3.

X in this case being the higher limit of your bridge. Besides determining the ratio b to a this shows that the resistance d must be less than your higher limit or the bridge won't work. The most sensitive point is of course where x is doubled. With this ratio we easily determine the value of c from the following equation:

$$c = \frac{b}{a}(x + e)$$

or in other words the sum of the resistance of the higher limit and that of *e* multiplied by the ratio found above of *b* to *a* is equal to the resistance of *c*. Measure off this resistance on your wire and mark the point on the board near the wire. Divide up the remaining portion of the wire proportionally to *a* and *b* and mark the position of the division on the board. You will need four more binding posts on your board which you can put on the back side, out of the way. A plan view of the bridge is given below, showing how to make the connections. See Fig. 4.

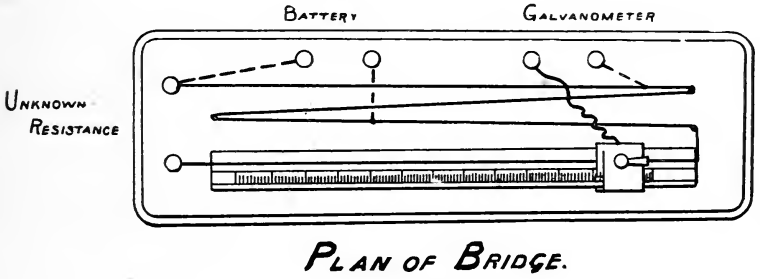

FIGURE 4.

The slider is connected to the galvanometer binding post by a thin, flexible conductor, and the other binding posts connected to the division points you marked above, and soldered. If everything had been accurately done the bridge would now be ready for use, but as it is impossible to do this exactly, we will have to go over it again to make the final adjustment. We will first, how

ever describe the galvanometer to be used with it. This is to be made after what is known as the D'Arsonval pattern, with a coil suspended between the limbs of a permanent magnet. See Fig. 5. Wind the coil in a former made of thin sheet copper, bent and soldered together in the form of a rectangle with the corners cut off and the edges turned up. Make this rectangle 2 inches long and 1½ inches wide and ½ inch thick, and insulate the channel, where the wire is to be, thoroughly

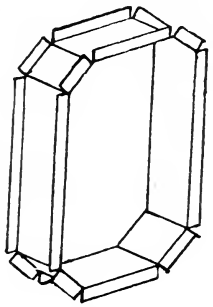

FIGURE 5.

with paper and shellac. Make a small hole in the bottom of the channel and pass the starting end through this into the inside of the rectangle and then wind on the wire. Use for this purpose No. 32 silk-covered copper wire, and wind on until you have a coil about ⅛ of an inch thick, and shellac it well, and afterwards dry it in a warm oven. To suspend the coil make two little hooks out of brass wire and solder them to two small

square plates of sheet brass or copper. See Fig. 6.

Solder one end of your wire to one of these plates, and the other end to the other plate and bind the plates firmly to the opposite ends of the coil, as shown in the general drawing by strong flax thread, insulating them of course carefully from the coil beneath them and the copper former.

Make the magnet of the best steel you can get. What is known as tungsten steel will give the best results if you can obtain it. Its cross section should be somewhere near 1½″×⅜″ and it should be bent as the sketch shows, leaving the opening

FIGURE 6.

between the poles ⅛″ wider than your coil and the length of the poles themselves about the length of the coils. Fig. 7.

In the middle of the top, drill a ⅛″ hole and make a plug with a milled head to fit it snugly and solder a small hook to the lower end of the plug Make your magnet glass hard, and strongly magnetise it by current in a helix of wire. The better and stronger your magnet is, the more sensitive will be the galvanometer and the less will it be

affected by outside disturbances. To increase the strength of the field make a core out of a piece of soft bar iron, which will go inside the coil and allow it to move freely. You will need a small mirror to attach to the coil. This can be made, but it is much better to buy it of a dealer in instrument supplies. The glass must be very thin and true. It can be fastened to the wire on which the hook is bent by sealing-wax. The accompanying sketch shows a galvanometer set up, but with one half removed for the sake of clearness. See Fig. 8.

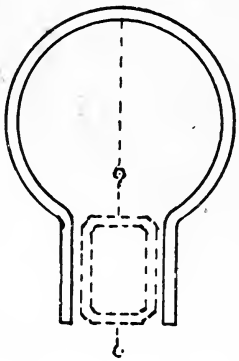

FIGURE 7.

Fasten the magnet to your base-board by means of brass angles. On the under side of the board cut out a place for the tension spring, which must be fastened to the board at one end, and at the other have a hook to engage with that on the coil. A small screw passing through the board and

bearing on the spring will serve to regulate the tension. Make a link of fine brass wire with an eye in each end to suspend the coil from, and hang

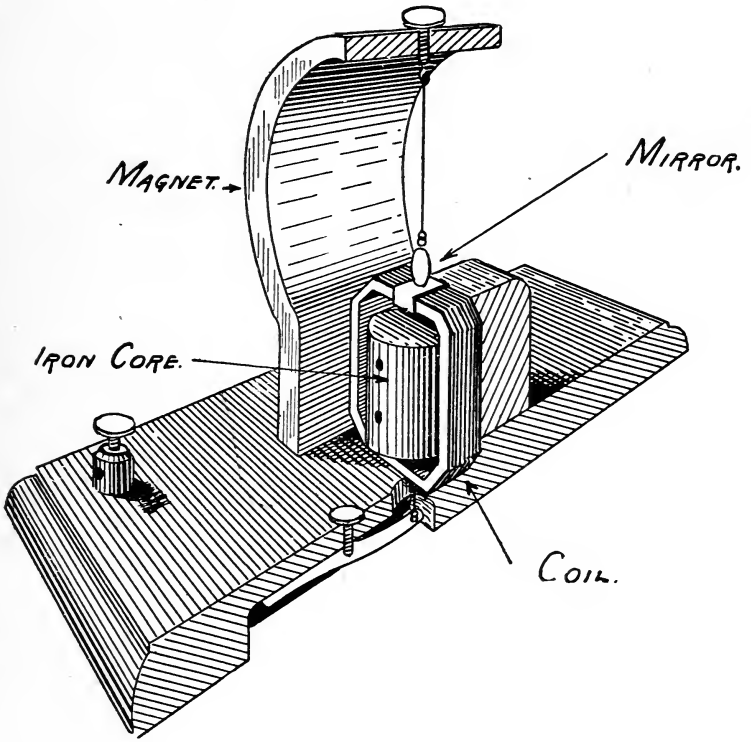

FIGURE 8.

it with the coil from the plug as shown. The plug will serve to bring the coil to zero if it should get displaced. The core is to be fastened to a block behind, which is shown in section, and must leave the coil free to rotate about the suspension, for

30° or 40°. Two binding posts will be needed, one to connect with the tension spring and the other with the magnet or the plug on top. On passing a current through the galvanometer the coil should deflect to one side or the other, according to the direction of the current. The currents we shall use in connection with the bridge will often be too small to give a deflection of the coil readily apparent to the eye, so we must arrange some means of detecting its movement. This can be done with a telescope, but as this instrument is not often found outside of laboratories, we will describe the apparatus for using a spot of light.

Unless you have a pretty dark corner in which to set up your instrument, you had perhaps better build a large box (or a frame and cover it with cloth), about 2 feet high, 3 wide and 3 long. Leave one end open and at the other mount a paper scale, divided decimally, and the divisions not much smaller than $\frac{1}{16}''$. Make the scale 2½ feet long. Just under the scale make an opening $\frac{1}{4}'' \times 2''$ to let the light of the flame through. The flame itself can be an ordinary kerosene lamp with a guard made of tin around the chimney, with several slits of varying widths cut in it. See Fig. 9.

Set up the galvanometer in the open end of the box with the mirror facing the other end. Place your lamp behind the opening, so that the light

from it will fall upon the mirror and be reflected upon the scale. The slip in the lamp guard should be well defined upon the scale, and unless you have the luck to get just the right kind of mirror, you may have to interpose a lens between it and the lamp to make the inflected image sharp. See Fig. 10.

Now when you pass a current through the instrument too small to give a perceptible deflec-

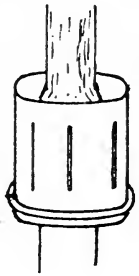

FIGURE 9.

tion, it will be shown by this arrangement as you have practically increased the length of the lever arm and doubled the angle of its movement. Almost any kind of battery will do for this, provided it gives sufficient voltage. As you are not using the battery constantly, one of the "open circuit" type will answer very well. If you expect to have your instrument portable there are some dry batteries made which answer excellently for this purpose.

We will now go back to the bridge. You should have a resistance measured off on some other bridge, which you can rely upon equal to the highest you expect to measure on your bridge. Put this between the "unknown" binding posts and connect your battery and galvanometer to

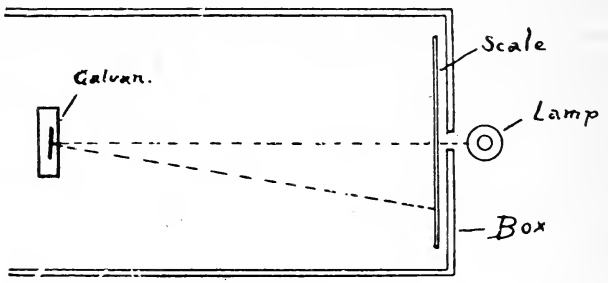

FIGURE 10.

their respective places. You should have a key in your battery circuit. It might well be placed permanently upon the bridge board. Adjust the reflected image to the middle of the scale by the plug at the top of the galvanometer. Press your battery key, and after placing your slider about where you wish your highest measurement to come, press its key also and watch its reflected light. It will probably move to one side or the other, in which case shift your slider back and

forth until the light comes to rest. You must of course never allow the contact piece to scrape over the wire, but first make your adjustment and then press the key. If the place where your light comes to, does not move, upon depressing the key, and is near enough on the slider scale to the place where you wish your highest mark to be, let it go and try the lowest. If not you will have to shift your soldered connections a little until it does come right, being careful each time to allow the wire to cool before making the test.

For the lowest point supposing you are going to make that zero, short circuit your "unknown" binding posts with a piece of thick wire and go through the same operation as above. When you have both lowest and highest points satisfactorily located, place a piece of cardboard along on the raised piece of wood where the slider index travels and mark the position of the index upon it at the highest and lowest resistance and divide up the space between into any convenient scale and paste the scale in place. The wire is probably not uniform, and if you desire a greater degree of accuracy, it might be well to locate some of the intermediate points by placing the corresponding resistances between the binding posts and fixing the points that way. If well made this is a very serviceable bridge, and after a little practice in watching the light, you can quickly tell which way

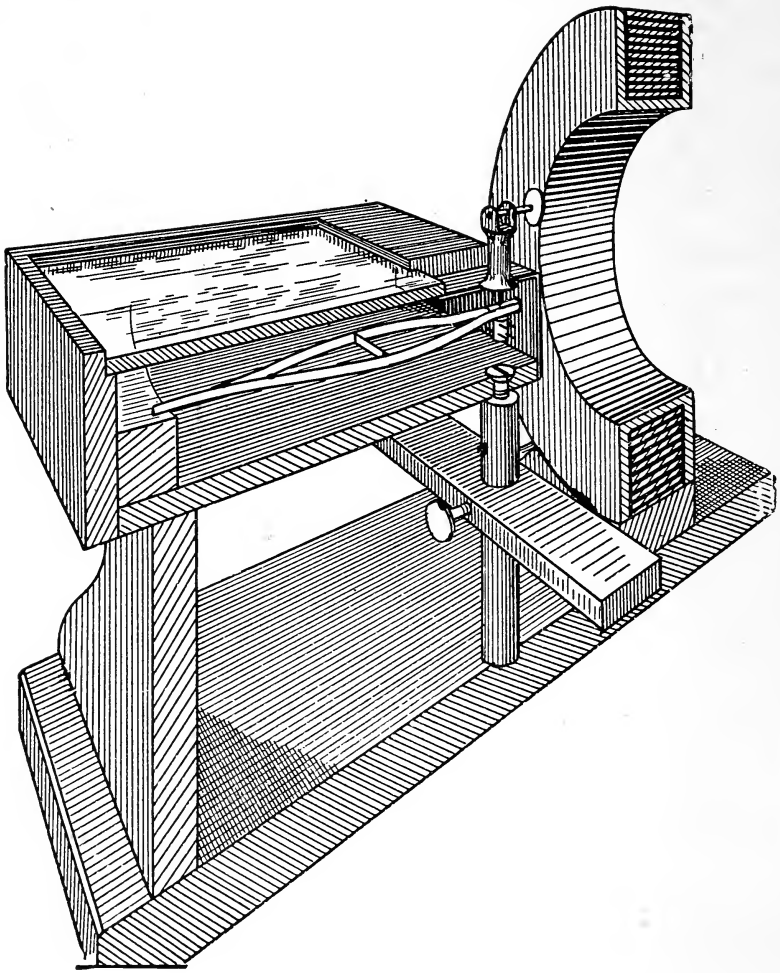

FIGURE 11.

to move the slider and how much. A glass shade over the galvanometer will improve its action somewhat by guarding against draughts of air.

The Volt and Ammeter. These two instruments will be practically the same in everything except winding, so we will describe them together. The accompanying sectional elevation gives a good idea of the appearance of the instrument when completed. See Fig. 11. One-half of it is removed for the sake of clearness. The form

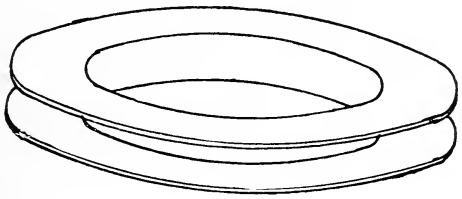

FIGURE 12.

upon which the coil is wound can be made of wood, but a light casting of brass turned up makes a much neater and more substantial job. Make it so that the channel in which the wire is wound is ¾″ wide and ¾″ deep and the diameter of the aperture in the centre 3½″. See Fig. 12.

This must be carefully insulated on the inside, especially in the case of the voltmeter. Wind the voltmeter with No. 34 German silver wire. The inside should be soldered to a thicker piece of copper wire which can pass through the bottom of

the ring by a hole in which is placed a wooden plug to insulate it. This winding will be suitable for measurements up to 150 volts. For higher voltages than this a smaller wire should be used. The winding of the ammeter will depend upon the current it is to measure. For currents up to 15 or 20 amperes No. 10 copper wire would be about right. For heavier currents a copper strip should be used, insulated with mica or a silk ribbon. The ring when wound should be mounted on the base-board in a notched piece of wood and the wires led to suitable binding posts.

A key should be placed in the voltmeter circuit in series with the coil. The coil when mounted should have its centre about 6″ above the base-board. Make the needle box of dry, well-seasoned wood, 5″ square and 1¼″ deep. One end must be removable to allow the glass cover to slide in and out, and at the other end an aperture must be made for a brass cover which carries the needle. At the removable end is placed the scale which is mounted on a block of wood cut to the segment of a circle, whose centre is the point of suspension of the needle. The brass cover which carries the needle is shown in Fig. 13.

This cover slides in grooves in the rear of the box. It has mounted on it a brass pillar with a hole drilled through its centre and carrying a plug at the top, with a milled head, upon which the fibre

is wound. This fibre passes down through the middle of the pillar and fastens to the suspension nook of the needle. The needle is composed of four small steel magnets made from a medium-sized sewing needle. Cut them about $\frac{5}{16}$" long

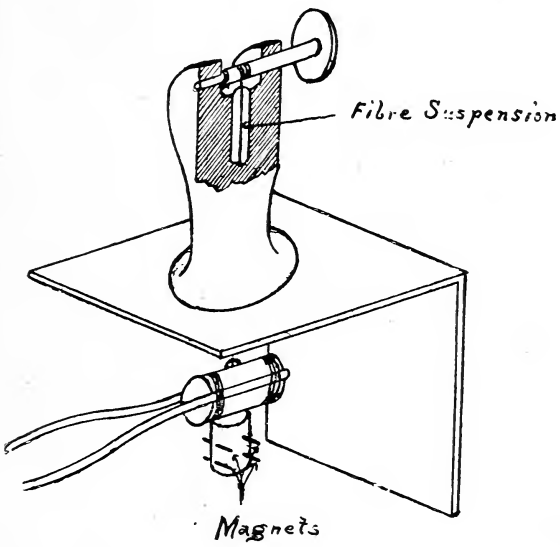

FIGURE 13.

and harden and magnetize them strongly. Thrust them through a piece of elder pith parallel to each other, as shown above, being careful to have the same poles point the same way.

The pointer is to be made of two pieces of split straw, stuck together at one end and bound to a piece of pith at the other with fine silk, and with

a piece of straw in the middle to spread them apart. The two pieces of pith should now be strung upon a fine piece of brass wire which passes through them twice and has a loop left to fasten the fibre. They will thus be held from turning relatively to each other, but not so strongly that they may not be twisted a little by hand when adjustment is necessary. The suspension wire should pass as nearly as possible through the middle of the group of little magnets. Now hang up the needle and counter-balance it with sealing-wax until the pointer stands horizontally. The suspension fibre is best if made of a piece of cocoon silk, but you can split up a piece of silk thread and get one that will answer the purpose. It is remarkable how much a single fibre of silk will support, so don't be deterred from keeping up the splitting process because what you already have looks fine. Fasten one end of the fibre to the plug at the top of the pillar and pass it down through the hole and fasten the other end to the hook. This is often a tedious job but patience will insure its success. Then place the cover with the needle in the box and turn the plug until the needle is lifted clear, and see that the end of the pointer is over the scale block. Of course looking down on it you see only the edge which enables you to take a very fine reading.

The box itself must be mounted, as shown, on a block at one end, and a brass rod at the other, and must be at such a height that when the needle within swings clear, it will be on the continuation of the axis of the coil. On the brass rod is mounted a bar-magnet which is arranged so it can be slid up and down, and clamped in any position

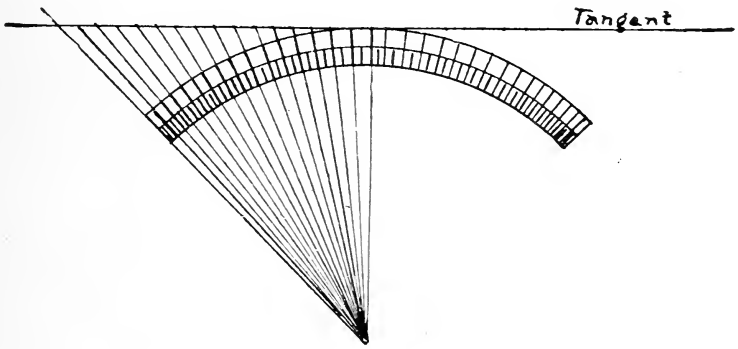

FIGURE 14.

with a set screw. This magnet must be made of the best steel and glass hard. It should be magnetized rather strongly and then "aged" by tapping it and immersing it for some hours in boiling water. This will reduce its strength but make it constant. The scale is marked off in tangents. This means that you lay off a circle on your scale paper equal to the radius of your pointer and draw a tangent to it. Beginning at the point of contact with the circle divide the

tangent into equal divisions, say 10″ to ¾″ and from these division points draw radial lines to the centre of the circle. Where these lines cut the circle they are to be marked and these divisions used as the scale. See Fig. 14.

Three leveling screws must be put into the base-board, and it would be well to hang a miniature plumb bob from the box and place a point beneath it on the base-board in such a position that when the bob is directly over it the fibre will swing free in the pillar.

The calibration of these instruments will perhaps be the most difficult part of the work for the average amateur. The best method of course would be by the use of a Clark's cell and a potentiometer for the voltmeter, and the cell or a copper voltameter for the ammeter.

Persons possessing this and the anxiliary apparatus will know, generally, how to use it, so that as a clear description of the process would take considerable space, we think it would be superfluous here. Direct comparison with some standard instrument we think will offer less difficulty than any other method supposing a reliable one to be accessible, and will give results accurate enough for most work, it being understood, as we said at the beginning, that any considerable degree of accuracy is not to be expected with these instruments. These instruments are not very portable

and should be calibrated in the place where they are to be used. They should be placed upon a good solid table, or pier, and in a place where there is no movable iron about. Iron itself is not an objection if it is stationary. The place should be at a distance from large currents or magnets. Set up the instrument on the table and carefully level it. Its coil should lie in the magnetic meridian and the controlling magnet with its *south seeking* pole to the north. Adjust the magnet so the needle points to zero on the scale and connect up the instrument to the source of current with your standard. Pass a current through them both and note the deflection; then reverse the current through your instrument but not through the standard, and by the aid of your standard bring it to the same strength again. Note the deflection again, and if it be not the same it shows that your pointer is not at right angles to the needle magnets, and that they must be twisted relatively to each other. Do this, adjust to zero again with the controlling magnet and repeat the operation until with the same current as indicated by your standard, the deflection to the right and left is equal. Now pass an even number of volts or amperes through your instruments and raise or lower your controlling magnet until the pointer is at a position on the scale that will give an even number of divisions of your scale per unit of current, say one

volt or ampere per division, five volts per division, etc. Take off the current and see if the pointer comes to zero; if not, adjust it so it will and make another trial to get the magnet where it will give an even reading on the scale. When this position is finally found, mark the place on the rod supporting the magnet and then find two or three other places which will give even readings. By having these you may vary the sensibility of your instrument to a large degree, according to the current you wish to measure.

We will close with a few directions as to the care of the instruments. After they are once in position and calibrated, do not disturb them or jar the magnets. If they were moved carefully and placed in the magnetic meridian, as before, in a place where H has the same value, they would read correctly, but this is not always easy to determine, so they had better not be moved unless necessary. Do not keep the current on the voltmeter any longer than is necessary to take a reading, as the coil will become warm and will not give the same result as before. Temperature does not make any difference in the ammeter, so long as it does not get high enough to injure the insulation. The wires leading from the ammeter should be twisted together to prevent their influencing the instrument. Recalibration should be resorted to at short periods until you find that the

controlling magnet has settled to the strength where it is going to stay.

In the accompanying cuts are illustrated a number of electrical testing and measuring instruments for the use of schools and students beginning laboratory work. Electrical science has made such rapid advances that untrained skill is no longer of much avail, nor have the colleges themselves been able to properly do all that is

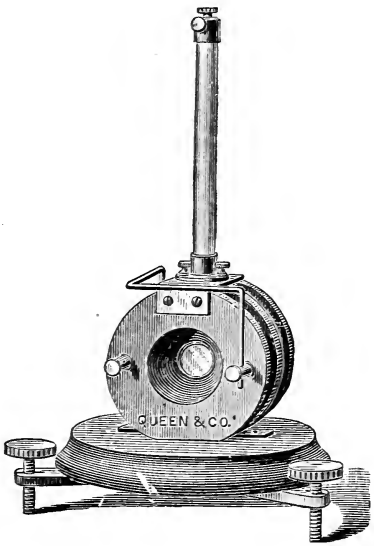

FIG. 15.

required of them in keeping up and at the head of investigation, while, at the same time, attempting to give elementary instruction. As a consequence each year more of this elementary work is relegated to the high schools and preparatory institu-

tions. Most of these schools however, supported by municipalities, or by private endowment, are unable to purchase high grade testing instruments, even were it desirable to put such extremely delicate instruments in the hands of beginners. It is claimed for the instruments shown that while capable of doing accurate work they are especially

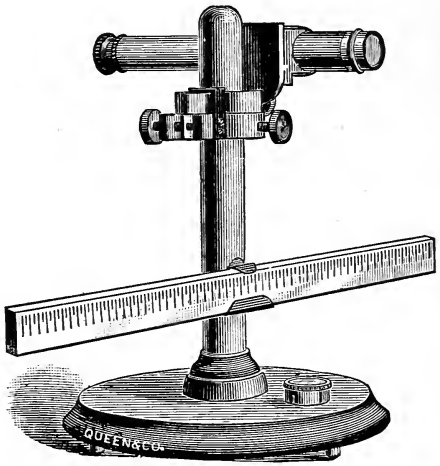

FIG. 16.

adapted to the use of beginners, as they are strongly made and have their delicate parts so arranged as to be easily and quickly replaced in case of injury.

Fig. 15 shows a reflecting galvanometer of the Thomson type; a small brass cylinder with glass face may be pushed backward and forward in the central axis of the coils, thus altering the size of the air chamber in which the mirror swings, and

enabling the deflections to be made dead beat. In the Edelmann type, shown in Fig. 16, the mirror is attached to a bell magnet moving in a mass of copper; by removing this mass of copper the instrument is made ballistic, thus making it useful for measurements of condenser capacities, battery resistances, comparison of electro-motive forces, etc. The coils are readily removable, as seen by the illustration, and may be changed in a moment for others of a higher or lower resistance.

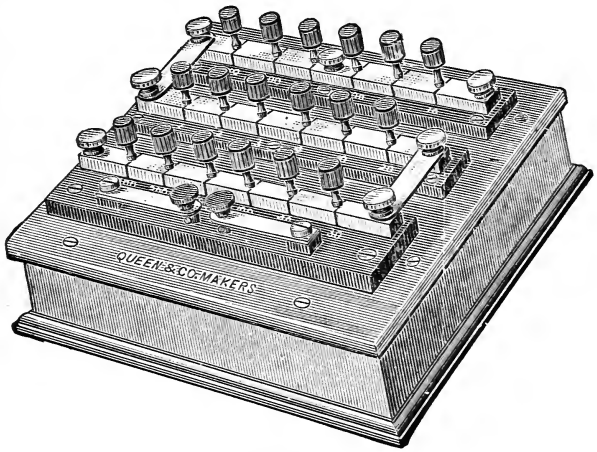

FIG. 17.

Fig. 17 is one of four or five resistance boxes of this series. The instrument shown in the cut is a combination Wheatstone bridge and resistance set, having 12 coils in the resistance portion aggregating 1,100 ohms, and bridge arms of 10,000 and 1,000 ohms on a side, thus giving a range of measurement from 1-100 ohms to 111,000.

There is also a reading telescope, Fig. 18. The base is of cherry and supports a central rod of the same wood. On the central rod are two rings which can be raised, lowered or rotated on the rod, while they may be securely fastened in any position by means of a set-screw in the lower ring.

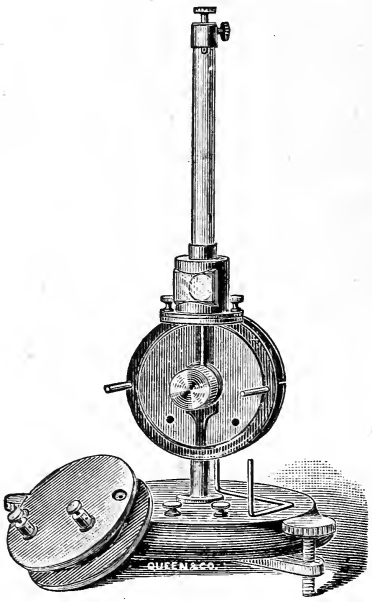

FIG. 18.

The upper ring carries the telescope and has a little lug held against a second set-screw in the lower one. By turning this set-screw a "fine" adjustment of the telescope in azimuth is secured. A set-screw in the upper ring allows the telescope to be adjusted in altitude. The instruments are placed on the market by Queen & Co., Philadelphia.

Horizontal Galvanometer, for measuring electrical resistances, testing currents, etc. Consists of a light magnetic needle, with agate bearings delicately pivoted on a needle-point, so as to have very little friction, and suspended above a flat coil

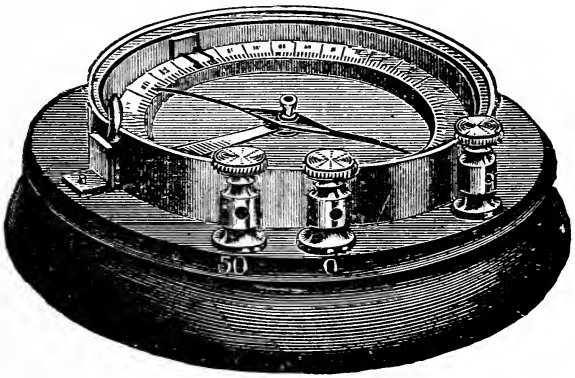

HORIZONTAL GALVANOMETER.

of wire. As an electric current passes through the coil, the needle is deflected out of the plane of the coil over a scale, and indicating by the amount of its deflection the intensity of the current.

Cardew Voltmeter.— This instrument differs from the greater number of voltmeters usually employed, in that it makes use of the heating effect of a current instead of its magnetic effect, and the rise of temperature of the conductor is measured by its expansion. This conductor, in the Cardew voltmeter, consists of about fourteen feet of platinum-silver wire of extremely small diameter; this

wire is made to pass along the whole length of the instrument over several pulleys, one of which is movable, and back to a terminal near its beginning. The strain of the wire on this movable pulley is

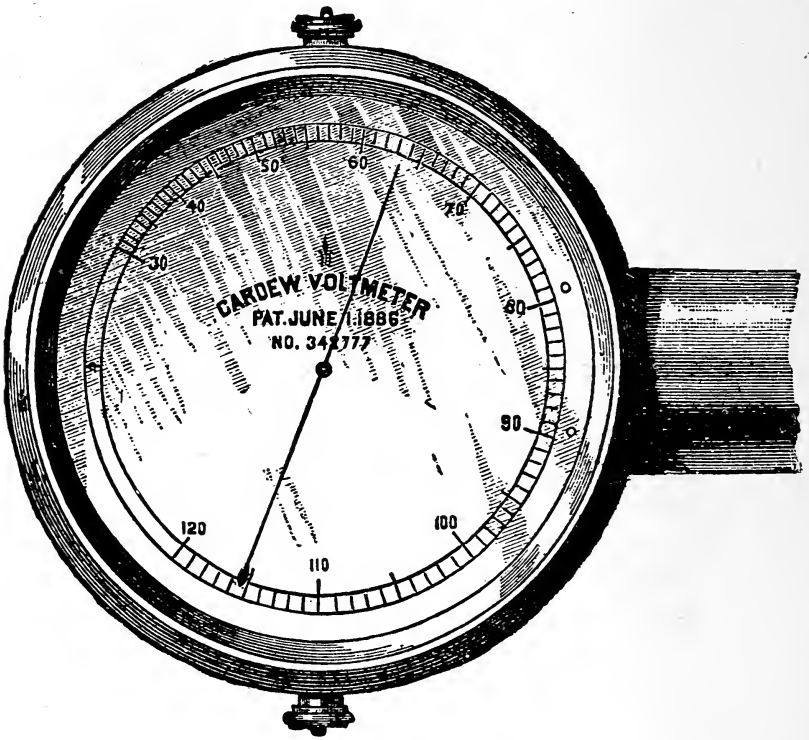

CARDEW VOLTMETER.

counteracted by a cord attached to a spiral spring, and passing about a small wheel, which, by its revolution, causes the pointer to be carried over the scale. This, as the wire expands or contracts, the pointer indicates, by its greater or less deflec-

tion, the amounts of such change. The advantage in using such a long, fine wire, in preference to a shorter one of much greater sectional area, is that the fine wire heats and cools much more quickly

WHEATSTONE'S BRIDGE.

than the large one does, thus making the instrument nearly dead heat. By introducing extra resistance, a much greater range of electro-motive force can be used.

The Cardew voltmeter can be used equally well for direct or alternating currents, since, depending

only on heating effect, errors of self-induction are not met with.

The Wheatstone's Bridge, illustrated, is for measuring resistance, and consists of a wooden

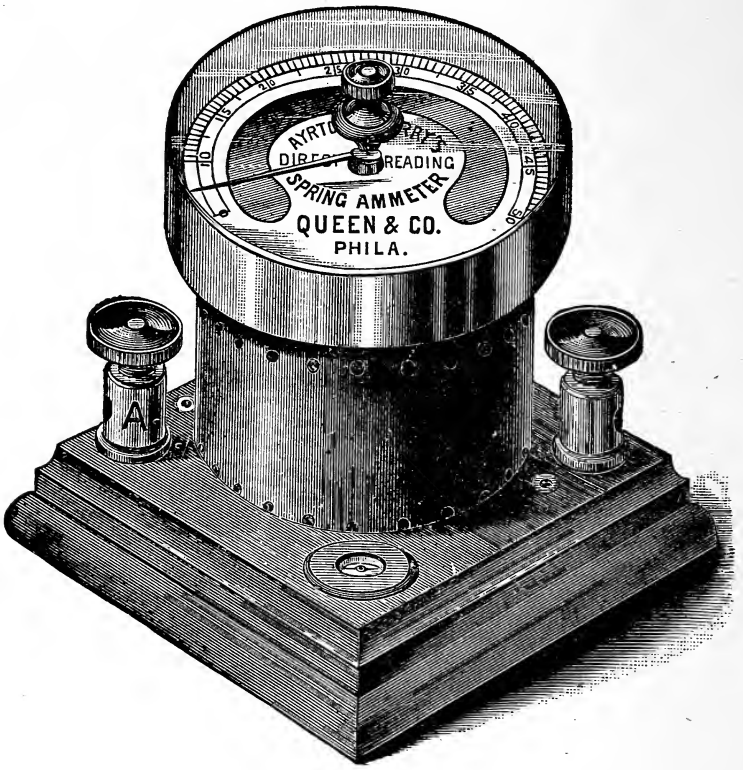

AYRTON & PERRY SPRING VOLTMETER AND SPRING AMMETER.

box containing coils of insulated platinum-silver wire, so wound as to avoid self-induction. The coils are made of different sizes of wire, in order to vary their resistance from one to 4,000 ohms, and

their ends are connected to the brass blocks seen on the top of the box. A brass plug fits between each two adjacent blocks, and when it is in, it short circuits the coil, whose ends are attached to the blocks. It is by putting in or pulling out these plugs that the resistance in the circuit is varied, in order to make the desired measurement.

The Ayrton & Perry Spring Voltmeter and Spring Ammeter are constructed on the same principle. Current is passed through a solenoid which then has a tendency to suck in any magnetic object. A piece of iron is suspended in the solenoid by means of a peculiarly constructed spring, which, when the iron is drawn down by the action of the current, causes a pointer to move over a scale graduated to read directly in volts or amperes. The illustration is an ammeter; the only difference between that and the voltmeter being in the size of wire used in the solenoid.

CHAPTER XXIII.

Table of Different Gauges, with their Diameters and Areas in Mils.

STANDARD.			AMERICAN.			BIRMINGHAM.		
No. of Gauge.	Diameter in Mils.	Area in C M=d²	No. of Gauge.	Diameter in Mils.	Area in C M=d²	No. of Gauge.	Diameter in Mils.	Area in C M=d²
7-0	500	250000						
6-0	464	215296	4-0	4600	211600	4-0	454	206116
5-0	432	186824				3-0	425	180625
4-0	400	160000	3-0	4096	167805			
3-0	372	138384	2-0	3648	133079	2-0	380	144400
2-0	348	121104				0	340	115600
0	324	104976	0	3249	105592			
1	300	90000				1	300	90000
2	276	76176	1	2893	83694	2	284	80656
3	252	63504	2	2576	66373	3	259	67081
4	232	53824	3	2294	52634	4	238	56644
5	212	44944				5	220	48400
6	192	36864	4	2043	41742	6	203	41209
7	176	30976	5	1819	33.02	7	180	32400
8	160	25600	6	162	26244	8	165	27225
9	144	20736	7	1443	20822	9	148	21904
10	128	16384	8	1285	16512	10	134	17956

Table of Different Gauges, with their Diameters and Areas in Mils.

STANDARD.			AMERICAN.			BIRMINGHAM.		
No. of Gauge.	Diameter in Mils.	Area in C M=d²	No. of Gauge.	Diameter in Mils.	Area in C M=d²	No. of Gauge.	Diameter in Mils.	Area in C M=d²
11	116	13456	9	1144	13110	11	120	14400
12	104	10816	10	1019	10381	12	109	11881
13	092	8464	11	0907	8226	13	095	9025
14	080	6400	12	0808	6528	14	083	6889
15	072	5184	13	072	5184	15	072	5184
16	064	4096	14	0641	4110	16	065	4225
17	056	3136	15	0571	3260	17	058	3364
18	048	2304	16	0508	2581	18	049	2401
			17	0452	2044	19	042	1764
19	040	1600	18	0403	1624			
20	036	1296	19	0359	1253	20	035	1225
21	032	1024	20	032	1024	21	032	1024
22	028	784	21	0285	820	22	028	784
23	024	576	22	0253	626	23	025	625
24	022	484	23	0226	510	24	022	484
25	020	400	24	0201	404	25	020	400
26	018	324	25	0179	320	26	018	324

TABLE SHOWING THE DIFFERENCE BETWEEN WIRE GAUGES.

No.	*New British.*	*London.*	*Stubs'.*	*Brown & Sharpe's.*
0000	.400	.454	.454	.460
000	.372	.425	.425	.40964
00	.348	.380	.380	.36480
0	.324	.340	.340	.32495
1	.300	.300	.300	.28930
2	.276	.284	.284	.25763
3	.252	.259	.259	.22942
4	.232	.238	.238	.20431
5	.212	.220	.220	.18194
6	.193	.203	.203	.16202
7	.176	.180	.180	.14428
8	.160	.165	.165	.12849
9	.144	.148	.148	.11443
10	.128	.134	.134	.10189
11	.116	.120	.120	.09074
12	.104	.109	.109	.08081
13	.092	.095	.095	.07196
14	.080	.083	.083	.06408
15	.072	.072	.072	.05706
16	.064	.065	.065	.05082
17	.056	.058	.058	.04525
18	.048	.049	.049	.04030
19	.040	.040	.042	.03589
20	.036	.035	.035	.03196
21	.032	.0315	.032	.02846
22	.028	.0295	.028	.025347
23	.024	.027	.025	.022571
24	.022	.025	.022	.0201
25	.020	.023	.023	.0179
26	.018	.0105	.018	.01594
27	.0164	.01875	.016	.014195
28	.0148	.0165	.014	.012641
29	.0136	.0155	.013	.011257
30	.0124	.01375	.012	.010025
31	.0116	.01225	.010	.008928
32	.0108	.01125	.009	.00795
33	.0100	.01025	.008	.00708
34	.0092	.0095	.007	.0063
35	.0084	.009	.005	.00561
36	.0075	.0075	.004	.005

RESISTANCE AND WEIGHT TABLE.

For Cotton and Silk Covered and Bare Copper Wire.

AMERICAN GAUGE.

The resistances are calculated for pure copper wire. The wire is about 98 per cent. of the conductivity of pure copper.

The number of feet to the pound is only approximate for insulated wire.

No.	FEET PER POUND.			RESISTANCE, NAKED COPPER.			
	Cotton covered.	Silk covered.	Naked.	Ohms per 1000 feet.	Ohms per mile.	Feet per ohm.	Ohms per pound.
8	..	..	20	.6259	3.3	1600.	.0125
9	..	..	25	.7892	4.1	1272.	.0197
10	..	..	32	.9441	4.9	1058.	.0270
11	..	..	40	1.254	6.4	798.	.0501
12	42	46	50	1.580	8.3	633.	.079
13	55	60	64	1.995	10.4	504.	.127
14	68	75	80	2.504	13.2	400.	.200
15	87	95	101	3.172	16.7	316.	.320
16	110	120	128	4.001	23.	230.	.512
17	140	150	161	5.04	26.	198.	.811
18	175	190	203	6.36	33.	157.	1.29
19	220	240	256	8.25	43.	121.	2.11
20	280	305	324	10.12	53.	99.	3.27
21	360	390	408	12.76	68.	76.5	5.20
22	450	490	514	16.25	85.	61.8	8.35
23	560	615	649	20.30	108.	48.9	13.3
24	715	775	818	25.60	135.	39.0	20.9
25	910	990	1030	32.2	170.	31.0	33.2
26	1165	1265	1300	40.7	214.	24.6	52.9
27	1445	1570	1640	51.3	270.	19.5	84.2
28	1810	1970	2070	64.8	343.	15.4	134.
29	2280	2480	2617	81.6	432.	12.2	213.
30	2805	3050	3287	103.	538.	9.8	338.
31	3605	3920	4144	130.	685.	7.7	539.
32	4535	4930	5227	164.	865.	6.1	856.
33	....	6200	6590	206.	1033.	4.9	1357.
34	...	7830	8330	260.	1389.	3.8	2166.
35	....	9830	10460	328.	1820.	2.9	3521.
36	....	12420	13210	414.	2200.	2.4	5469.

ILLUSTRATED DICTIONARY

OF

ELECTRICAL TERMS

AND PHRASES.

CHAPTER XXIV.

ACCUMULATOR. — See battery and condenser.

AMMETER. — An instrument for measuring current strength.

AMPERE. — The unit of current strength. It is the flow of electricity produced by the pressure of one volt on the resistance of one ohm.

ANODE. — The conductor or plate of a decomposition cell connected with the positive terminal of any electric source. The term usually used to designate terminal of a source at which electrolysis is taking place. It is the plate connected with the positive terminal, which is dissolved in the process of electro plating.

ARC. — The stream of hot gasses and particles of carbon visible between the carbons of an arc lamp.

ARMATURE. — That part of a dynamo in which the current is induced. It may be a stationary or moving part, but is generally the latter, and is composed of coils of wire which "cut" the lines of magnetic force produced by the fields. This "cutting" induces a current in the coils.

ARMATURE CORE. — The core of iron of a dynamo or motor around or on which the coils of wire are wound or disposed.

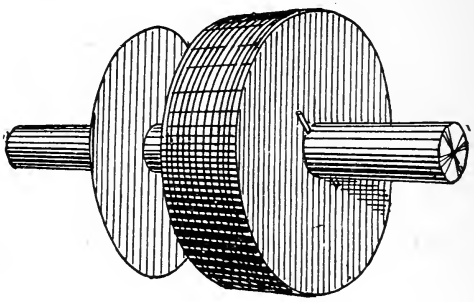

BATTERY. — One or more cells in which electricity is produced by chemical action. There are two elements of different substances and a liquid in every voltaic battery. A primary battery is one in which the "elements" are placed and used until they are worn out. In a secondary or storage battery or accumulator the "elements" are placed in the cell and first "formed" by the passage of a current of electricity through them. The cell is then said to be charged and may be used to supply electricity. The term battery is also used to designate a collection of Leyden jars in which static electricity is stored.

BRUSH. — A collection of metal sheets or wires which press against the commutator of a dynamo to collect the electricity, or of a motor to supply it. Carbon brushes are coming into use now especially in railway work.

B. & S. — Brown and Sharp. The wire gauge used in America.

B. W. G. — Birmingham wire gauge. The English wire gauge.

CELL. — The jar in which the elements and liquid of a battery are placed. The term is used also for the jar and its contents.

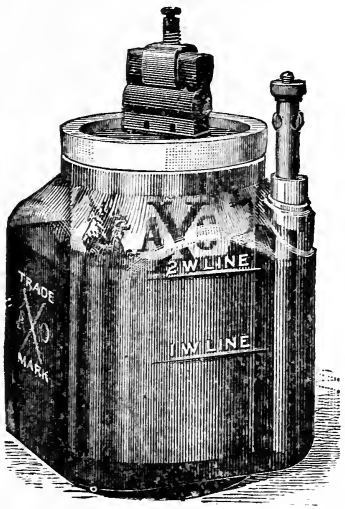

C. G. S. — The abbreviation of centimetre, gramme, second, and used to designate the so-called absolute system of measurements.

CIRCUIT. — A system of conductors over which electricity passes.

COIL, CLOSED. — The coils of an armature are said to be closed when the end of one is connected to the beginning of the next at the commutator bar. An open coil armature is one

in which each coil is independent of the others and has its own commutator bars.

COILS, RESISTANCE. — Coils of wire, the electrical resistance of which is known, employed for measuring the resistance of a circuit.

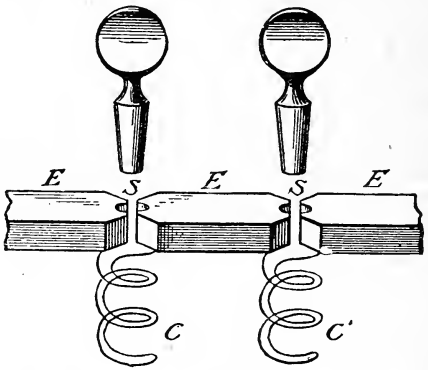

COMMUTATOR. — That part of a dynamo on which the current from the armature is rectified before passing to the external circuit. The current in a given section of an armature alternates and must be made continuous on leaving it. This is done by the commutator, which consists of a series of insulated metal bars connected to the armature wires and so placed as to feed into different brushes as the current changes.

CONDENSER. — An apparatus for collecting and holding electricity. It consists of alternate layers of conducting sheets and insulating material, the conductors being very close together, and the adjacent ones being charged

with the opposite kinds of electricity. Their proximity enables them to hold a larger amount of electricity than they could if alone. Condensers are sometimes called accumulators.

CONDUCTOR. — A substance which will allow the passage of electricity over it. All substances will do this, but some to so small an extent that they are called insulators.

COULOMB. — The unit of electric quantity. It is the amount of electricity which flows past a given point in one second on a circuit conveying one ampere.

CURRENT. — The flow of electricity in a conductor analogous to the flow of water in a pipe. A continuous current is one that does not change its direction, while the alternating current is one that periodically reverses.

CUT OUT. — An arrangement for interrupting a current or for shunting it around some part of a circuit.

DYNAMO. — A machine driven by power which furnishes electricity.

DYNAMOMETER. — An apparatus for measuring the power given out or consumed by a machine. An electro-dynamometer is an instrument for measuring a current by the mutual action of two coils through which it passes.

ELECTRODE. — A pole of a battery.

E. M. F. — An abbreviation for electro-motive force. This is the pressure which forces the electric current through a conductor.

ELECTRO-MAGNET. — A magnet produced by passing a current through a coil of wire around a soft iron core. The core is magnetized while the current flows, but loses its magnetism when the current stops. This form of magnet may be made much more powerful than a permanent magnet, and is therefore used in place of the latter in dynamos.

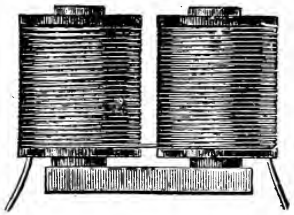

FARAD. — The unit of capacity. A condenser that will hold one coulomb at a pressure of one volt has a capacity of one farad.

FILAMENT. — In an incandescent lamp the thread of carbon which becomes luminous when the current is passed through it.

FORMULÆ. — Mathamatical expression for some general rule or principle, for example, in the formation of Ohms law

$$C = \frac{E}{R}.$$

C, the current is equal to the electro-motor force—E, divided by the resistance R. Formulæ are usually written in the form of an equation and therefore contain the sign of equality or . =

FOUCAULT CURRENTS. — Local, Eddy, or Parasitical — useless currents produced in metallic masses of the pole pieces, armatures or field magnet cores of dynamo electric machines or motors, either by motion of these parts through the magnetic fields, or by the variations in the strength of electric currents flowing near them.

FRICTIONAL ELECTRICITY. — Electricity produced by friction, as by frictional machines, as the Holtz, Töppler, Holtz, etc. Is often produced by belts around pulleys.

GALVANOMETER. — An instrument for detecting and measuring the electric current by the action of a coil of wire upon a magnetic needle.

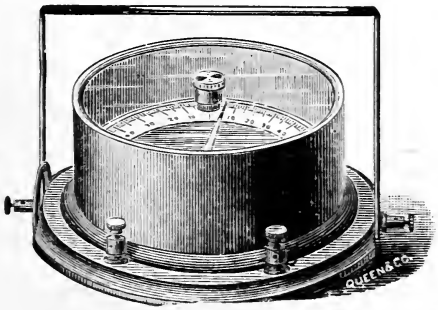

INDUCTION.—A current is said to be induced in a conductor when it is caused by the conductor cutting lines of magnetic force. A fluctuating current in a conductor will tend to induce a fluctuating current in another running parallel to it. A static charge of electricity is induced in neighboring bodies by the presence of an electrified body. A magnet "induces" magnetism in neighboring magnetic bodies.

INDUCTION COIL.—An arrangement by which an alternating or fluctuating current in a coil of wire will induce an alternating current in a parallel coil.

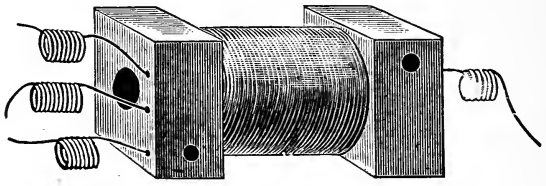

KATHODE. — The name given to the plate attached to the negative terminal of an electric source, generally used in connection with electrolysis. The article undergoing the process of electro-plating may be termed a *Kathode.*

LINES OF FORCE. — Imaginary lines which radiate from a magnet and show by their direction the path which a free magnetic pole would take if left to itself. Conventionally the strength of a magnetic field is indicated by the number of

these lines. Their form is shown by the well known experiment with the magnet and iron filings.

MAGNET.—A body possessing the property of attracting iron, steel and a few other metals.

MAGNETIC FIELD.—The space around a magnet in which its power of attraction is exhibited.

MULTIPLE OR MULTIPLE ARC.—A method of connecting electric conductors by which a number of sources of electricity feed directly into or a number of receivers of electricity take it directly from the same mains.

NEGATIVE.—A conventional term to indicate the direction of flow of a current, or the state of electrification of a body. The negative or terminal of a dynamo is the one at which electricity enters it from the external circuit, while the negative terminal of a lamp or instrument is that connected towards the negative terminal of a dynamo. It is designated by—

OHM.—The unit of electrical resistance.

OHMS LAW.—States that the current in any circuit is equal to the E. M. F. acting on it divided by its resistance.

PERMANENT MAGNET.—A piece of hardened steel which retains its magnetism after the magnetizing influence is removed.

PARALLEL.—See Multiple.

POLE.—Those parts of a magnet which show the strongest magnetic force. In a bar magnet this is generally a short distance from the ends. The pole of a dynamo or battery is one of its terminals.

POSITIVE.—A conventional term to show the direction of a current. In a dynamo or battery it is the terminal at which the electricity leaves it. It is designated by +.

POTENTIAL.—Power to do work. It is commonly used as synonymous with electro-motive force in speaking of dynamos or batteries.

RESISTANCE.—The opposition offered by a body to the passage of electricity through it.

RHEOSTAT.—An apparatus for throwing a variable resistance into a circuit at will.

SERIES.—Two or more conductors are said to be in series when they are so connected that the same current that passes through one passes through the other.

SHORT CIRCUIT.—An indefinite term, used generally in the case of dynamos and batteries for a resistance between the terminals lower than the machine or battery is calculated to stand or run on in practice. With lamps the term is used for a low resistance between the terminals, which deprives it of most of the current.

SHUNT.—A shunt is a conductor connected around another in such a way that it deprives the first of a part of the current.

SOLENOID.—A hollow coil of wire.

TERMINAL.—The point at which the electricity enters or leaves an electrical apparatus.

THERMO-ELECTRICITY. — Electricity produced by differences of temperature at the junctions of dissimilar metals. It may even be produced in the same metal; such as a wire part of which is straight and the remainder bent into a spiral, if heated at one end by the flame of a lamp.

VACUUM. — A space from which all traces of residual gas or gases have been removed.

VENTILATING ARMATURE. — An armature so constructed that it draws a current of air from both ends and along the line of shaft and out through the discs, which are separated, and

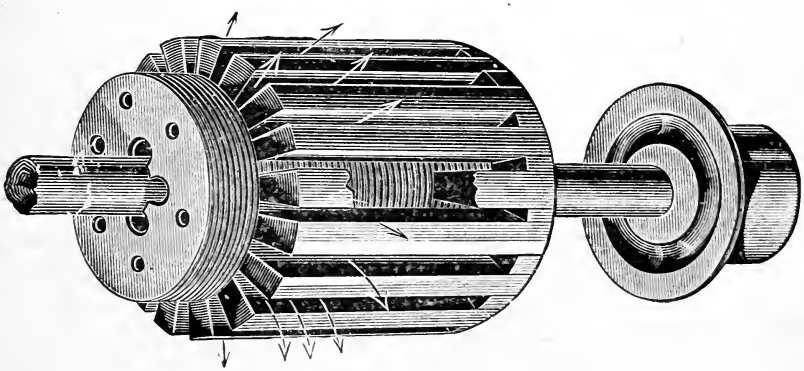

through the winding, with openings to let the air pass out. The rapid rotary motion of the armature sends out the current of air, which keeps the armature and pole pieces cool and therefore more effective than the old style which is so liable to heat up.

VOLT.—The unit of electro-motive force or pressure analogous to the head of water in hydraulics.

VOLTAMETER — An electrolytic cell employed for measuring the strength of the electric current passing through it by the amount of chemical decomposition effected in a given time.

VOLTMETER.—An instrument for measuring the voltage or pressure on a circuit.

WATT.—The unit of work. The watts developed in a circuit are equal to the current multiplied by the E. M. F. 746 watts equal one horse power.

WATTMETER.—An instrument for measuring the electrical energy in a circuit.

APPENDIX.

AUTOMOBILES.

THAT the horseless carriage has come to stay no one denies. There are three varieties, the electric, the gasoline, and the steam. In this chapter we shall describe the electric only, and for examples have selected types of the Waverley.

The vehicles described herein are the very latest additions to the Waverley Line, and vary in construction in several ways from any vehicles yet produced by them, being lighter, and of longer range, than any now on the market. With these models they hope to meet the popular and growing demand for a light, comfortable and handsome vehicle at a low price to the purchaser; and we believe an examination and inspection of these vehicles will be convincing proof that they have succeeded, without reducing the high mechanical standard of their products.

To the electric carriage, as compared with any other motive power, the following points of superiority are conceded:

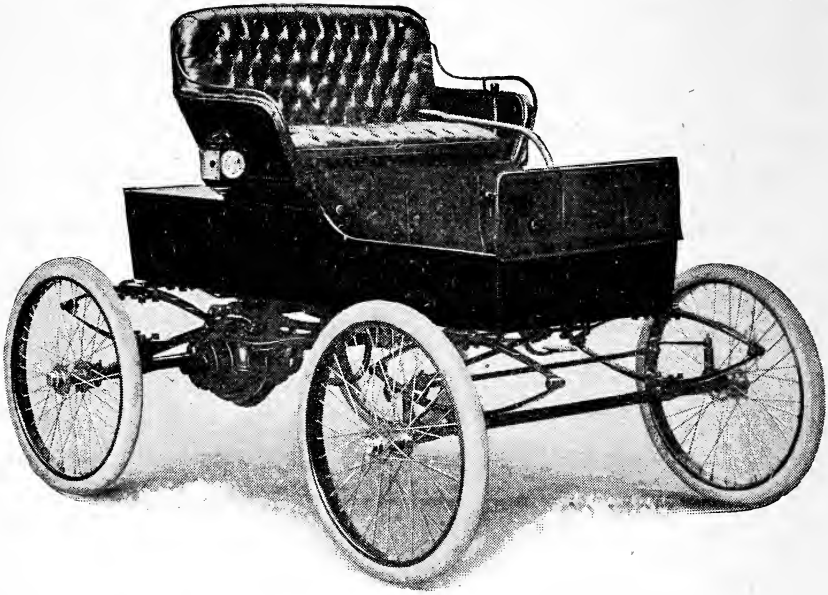

MODEL NO. 21. ROAD WAGON. WEIGHT 1000 LBS.

It is safe, simple in operation, noiseless, odorless, clean, efficient, economical, comfortable, handsome, and durable. The exclusive possession of all these qualities places the Waverley vehicle in a class by itself — unapproachable, incomparable. The pleasure of electrical operation and riding is complete, as it is free from the nervous strain which must accompany the attendance of complicated mechanism. In the Waverley Electric Carriage is realized the satisfaction of repose in action.

A description of Model No. 21 is as follows:

Piano box pattern: length, 5 feet 10 inches; width, 2 feet 3 inches; height from ground, 25 inches.

The wheels are 30 inches in diameter, wire spokes; 2½-inch pneumatic tires.

The motor is of a new and improved design, of a normal capacity of 2 H. P., capable of an overload of 2 H. P. additional. Speed from 5 to 17 miles per hour.

The gearing is of the "herring-bone" type, protected in dust-proof cases and runs in oil.

Each vehicle is equipped with a combination volt and ammeter.

The storage battery is used. Weight, 360 pounds.

A rheostat is used for charging the battery.

Model No. 22 is a piano box pattern; length,

MODEL NO. 22. ROAD WAGON, WITH TOP. WEIGHT 1050 LBS

5 feet 10 inches; width, 2 feet 3 inches; height from ground, 25 inches.

It has a full leather top.

The wheels are 30 inches diameter, wire spokes; $2\frac{1}{2}$-inch pneumatic tires.

The motor is of a new and improved design, of a normal capacity of 2 H. P., capable of an overload of 2 H. P. additional. Speed, from 5 to 17 miles per hour.

The gearing is of the "herring-bone" type, protected in dust-proof cases, and runs in oil.

Each vehicle is equipped with a combination volt and ammeter.

The storage battery is used, and is described on page 12. Weight, 360 pounds.

A rheostat is used for charging battery — the same as in Model 21.

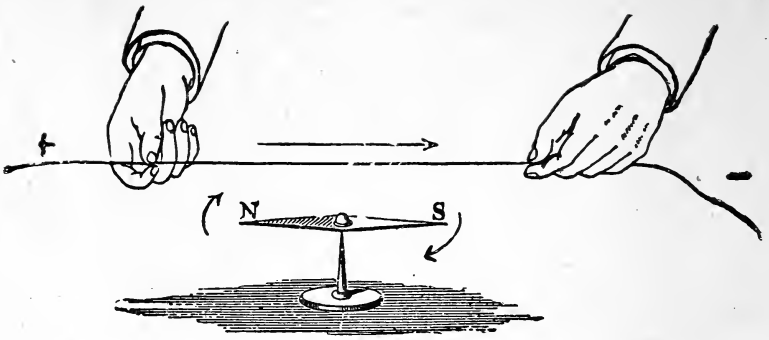

BUBIER'S

Popular Electrician.

A SCIENTIFIC ILLUSTRATED MONTHLY

For the Amateur and Public at Large.

Containing descriptions of all the new inventions as fast as they are patented; also lists of patents filed each month at the Patent Office in Washington, D. C. Interesting articles by popular writers upon scientific subjects written in a way that the merest beginner in science can understand. Also a Question and Answer Column free to all subscribers.

Price, Postpaid, 50c. a Year.

SAMPLE COPY FIVE CENTS.

☞ **Send for it. You will be more than pleased.**

Bubier Publishing Co., Lynn, Mass.

LE Mr '10

LIBRARY OF CONGRESS
0 020 237 550 9